## 4010_Main_Connector

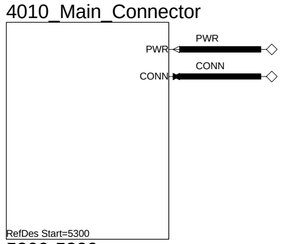


5300-5399

## 4010_Power

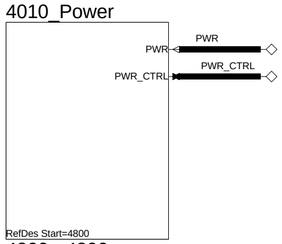


4800 - 4899

## 4010_PMIC1

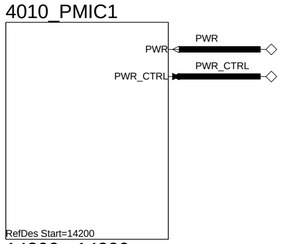


14200 - 14299

## 4010_Debug

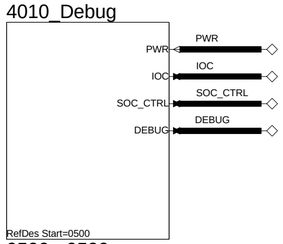


0500 - 0599

## 4010_FPGA

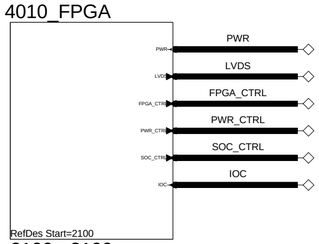


2100 - 2199

## 4010_IOC

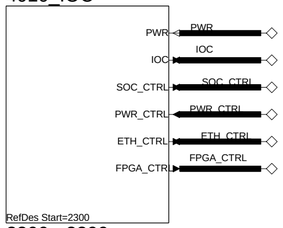


2300 - 2399

## 4010_SoC

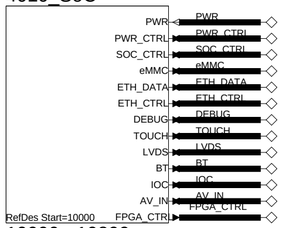


10000 - 10899

## 4010_eMMC

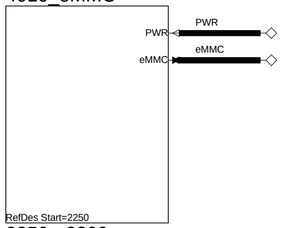


2250 - 2299

## 4010_Bluetooth

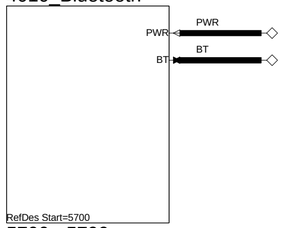


5700 - 5799

## 4010_ETH_PHY

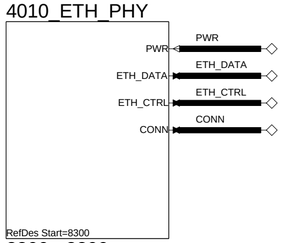


8300 - 8399

## 4010_CAN

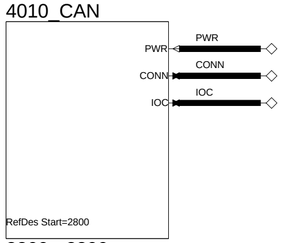


2800 - 2899

## 4010_TFT_Conn

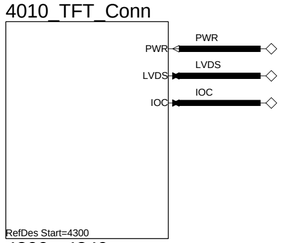


4300 - 4349

## 4010_TFT_BL

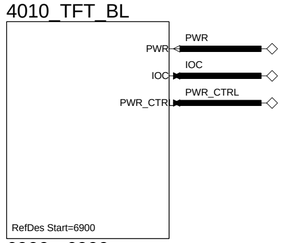


6900 - 6999

## 4010_CTP

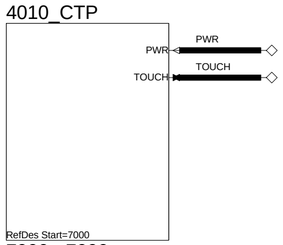


7000 - 7099

## 4010_VIDEO_DES

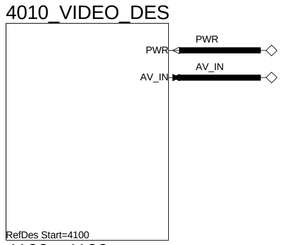


4100 - 4199

## 4010_TFT_BL_Conn

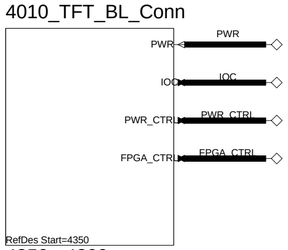


4350 - 4399

BC1

BARCODE-LABEL65X65

BC2

BARCODE-LABEL65X65

| Rev. | type of change | change-no. | date of change | auth. | checked |
|---|---|---|---|---|---|
| A | DV Change of topology for the backlight power supply | CN0008078 | 11-29-2023 | FY | CZ |
| A | ED initial Release | CN0001912 | 07-30-2023 | FY | CZ |

HARMAN

Copyright reserved

Wiring modifications reserved

| | date | name |
|---|---|---|
| created | 11-29-2023 | FYañez |
| checked | 11-29-2023 | CZamora |

schematic SCHEM 4010 MAIN C143

Root_4010 FCA FRONT PASSENGER DISPLAY MODULE

| Sheet | Sheets of | Sample |
|---|---|---|
| 1 | 31 | DV1 |
| **Type** | **Variant** | **Part Number** |
| C143 | C143 | 4106088 |

substitute for:

substitute by:

A2 16-02-12

The reproduction, distribution and utilization of this document as well as the communication of its contents to others without explicit authorization is prohibited. Offenders will be held liable for the payment of damages. All rights reserved in the event of the grant of a patent, utility model or design.

# BLUETOOTH (5700-5799)

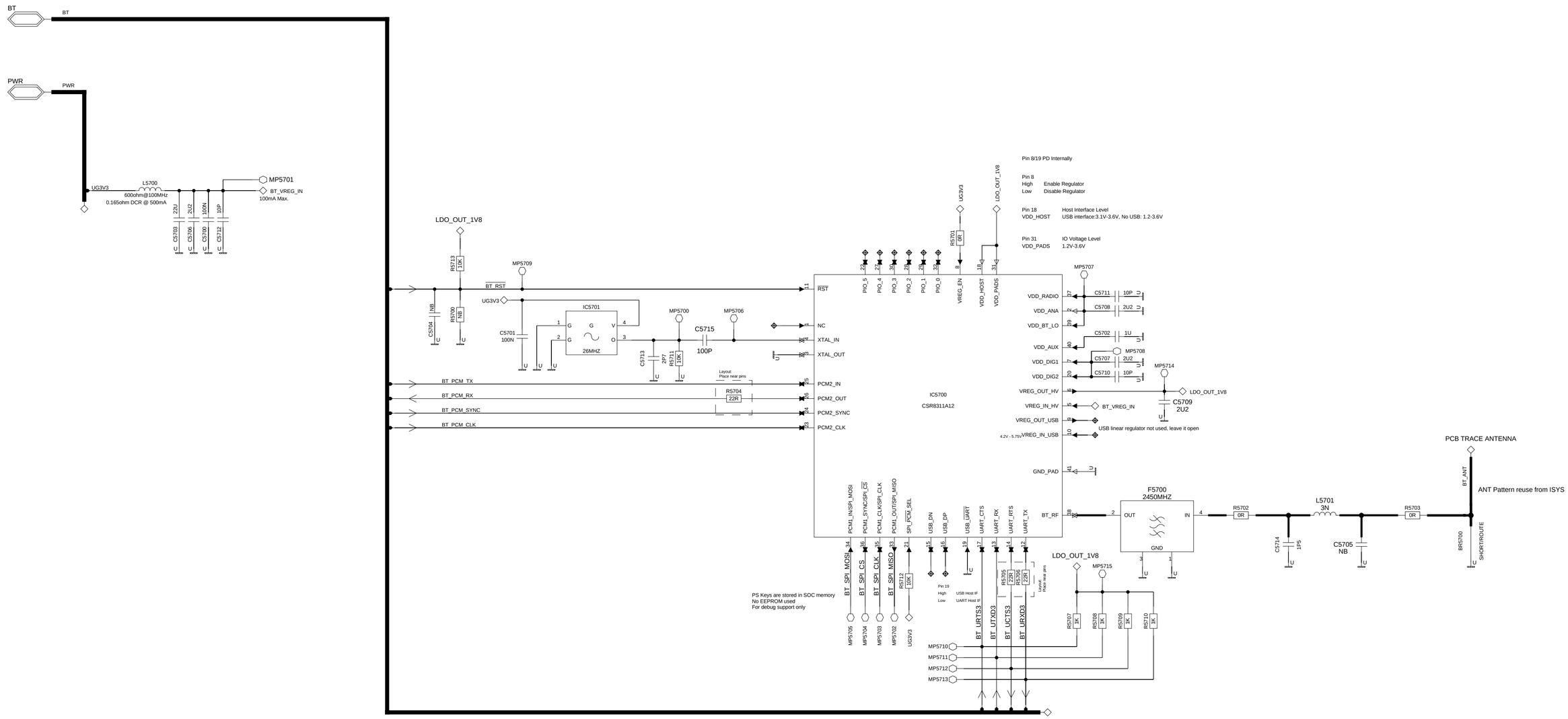


| Rev. | type of change | change-no. | date of change | auth. | checked |
|---|---|---|---|---|---|
| | | | | | |

HARMAN

Copyright reserved

Wiring modifications reserved

| | date | name |
|---|---|---|
| created | | |
| checked | | |

| schematic | Sheet | Sheets of | Sample |
|---|---|---|---|
| 4010_Bluetooth | 2 | 31 | |
| substitute for: / substitute by: | Type | Variant | Part Number |
| | | C143 | |

A2 16.02.12

The reproduction, distribution and utilization of this document as well as the communication of its contents to others without explicit authorization is prohibited. Offenders will be held liable for the payment of damages. All rights reserved in the event of the grant of a patent, utility model or design.

False

CAN (2800-2899)

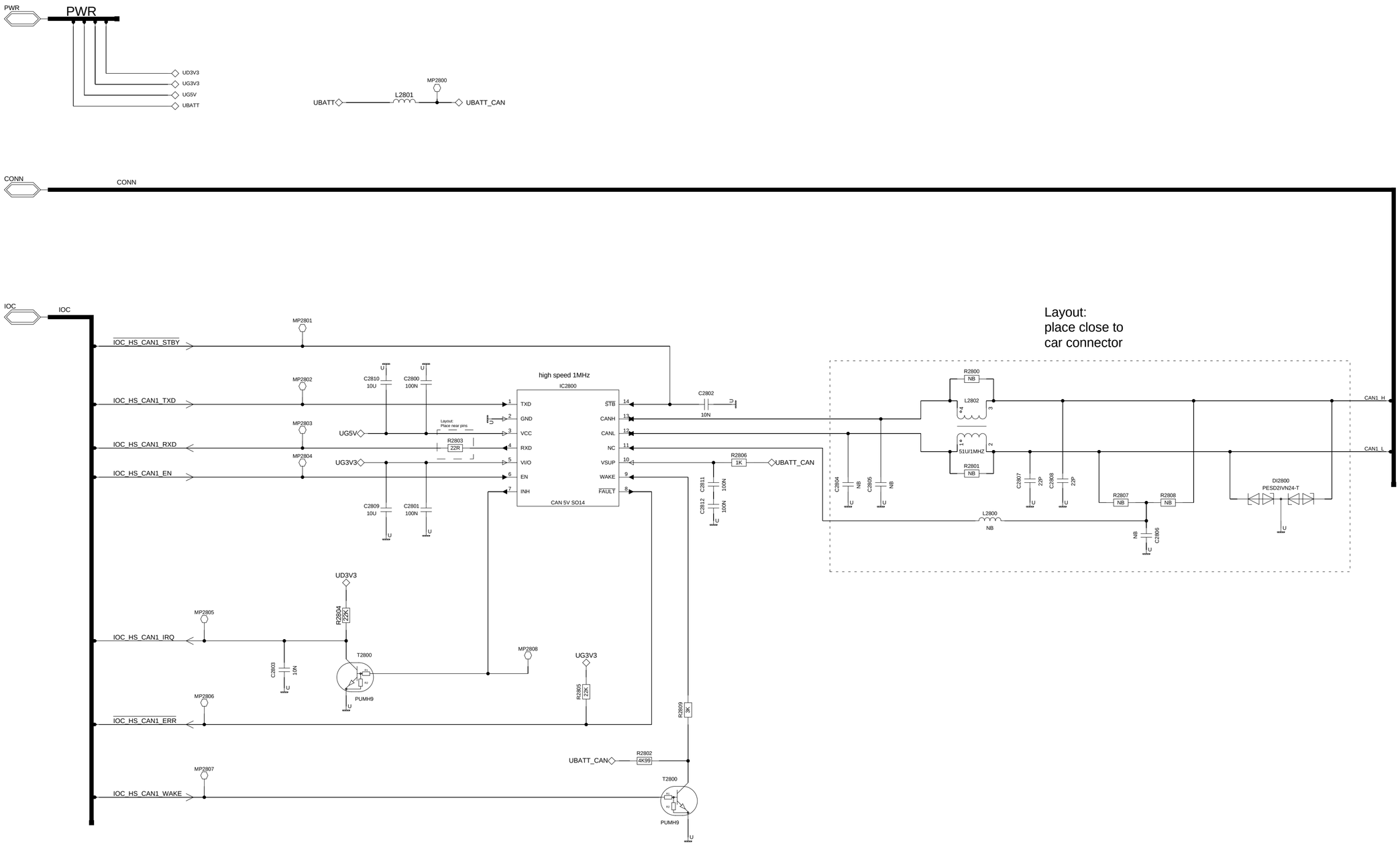


The reproduction, distribution and utilization of this document as well as the communication of its contents to others without explicit authorization is prohibited. Offenders will be held liable for the payment of damages. All rights reserved in the event of the grant of a patent, utility model or design.

| Rev. | type of change | change-no. | date of change | auth. | checked |
|---|---|---|---|---|---|

HARMAN

Copyright reserved

Wiring modifications reserved

| | date | name |
|---|---|---|
| created | | |
| checked | | |

schematic

4010_CAN

| Sheet | Sheets of | Sample |
|---|---|---|
| 3 | 31 | |
| Type | Variant | Part Number |

substitute for:

substitute by:

A2 16.02.12

False

# CTP (7000-7099)

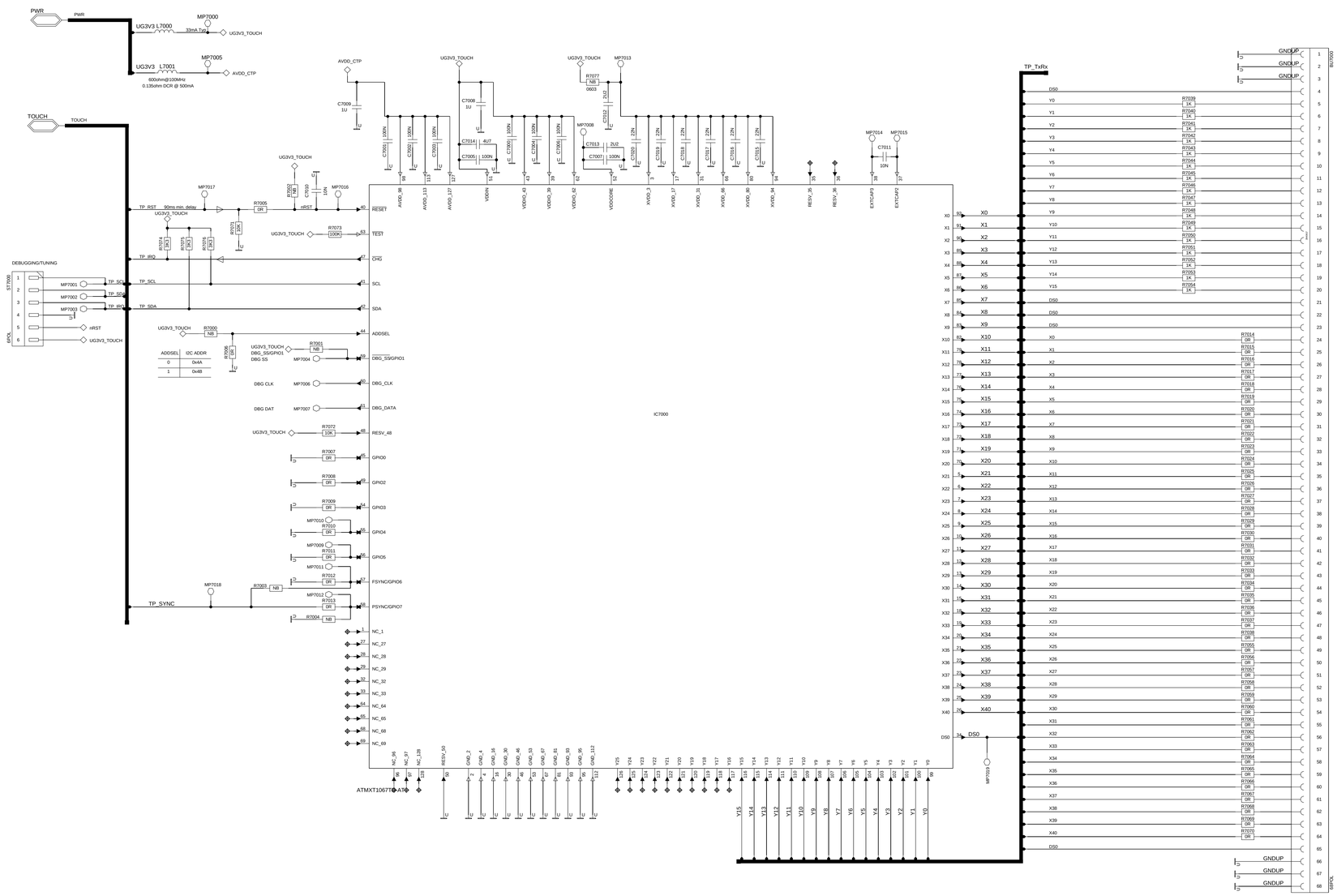


The reproduction, distribution and utilization of this document as well as the communication of its contents to others without explicit authorization is prohibited. Offenders will be held liable for the payment of damages. All rights reserved in the event of the grant of a patent, utility model or design.

| Rev. | type of change | change-no. | date of change | auth. | checked |
|---|---|---|---|---|---|

HARMAN

Copyright reserved

Wiring modifications reserved

| | date | name |
|---|---|---|
| created | | |
| checked | | |

schematic

4010_CTP

| Sheet | Sheets of | Sample |
|---|---|---|
| 4 | 31 | |

| Type | Variant | Part Number |
|---|---|---|
| | C143 | |

substitute for:

substitute by:

21.10.09 07

False

# DEBUG (0500-0599)

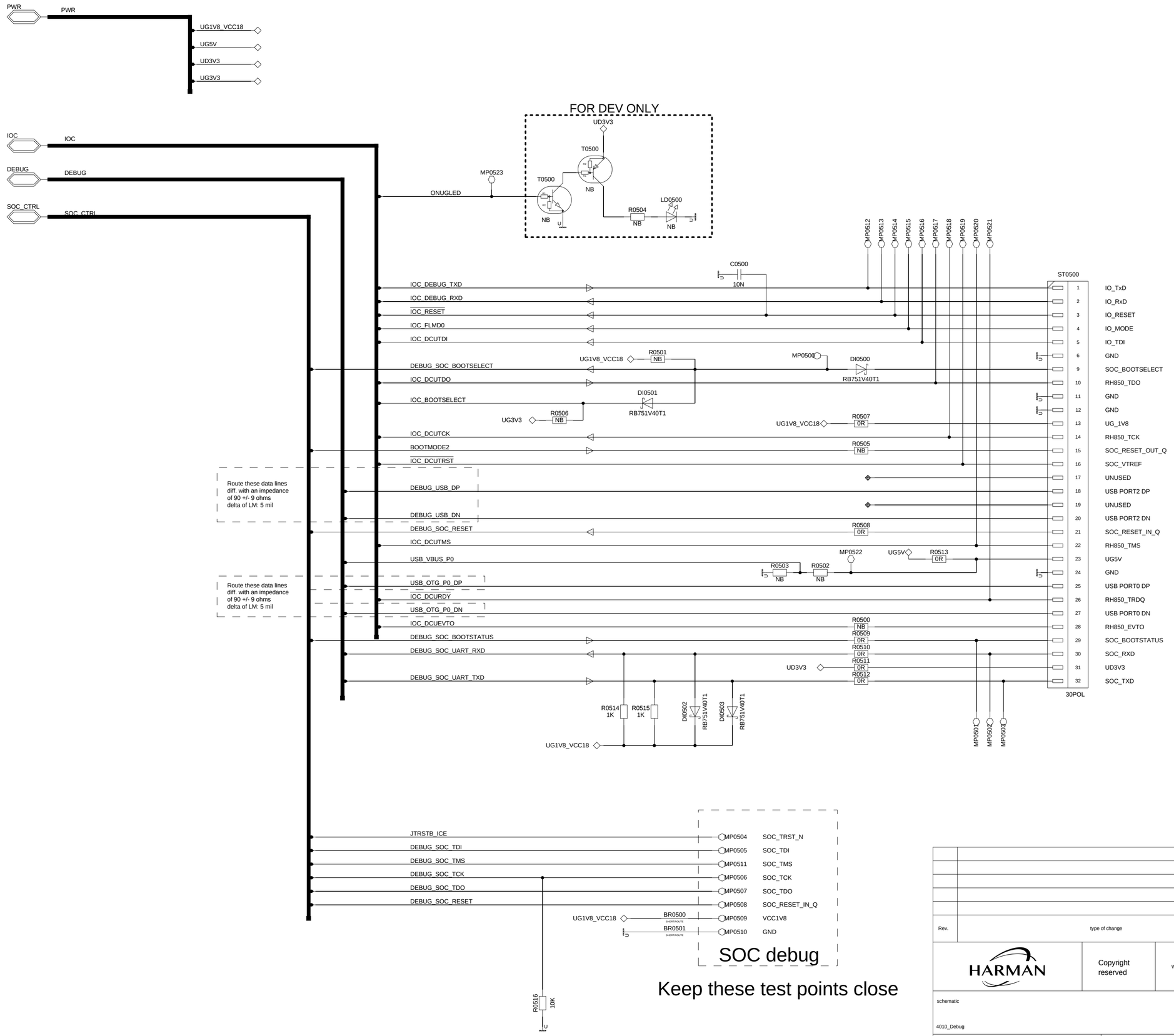


Keep these test points close

| Rev. | type of change | change-no. | date of change | auth. | checked |
|---|---|---|---|---|---|

HARMAN

Copyright reserved

Wiring modifications reserved

| | date | name |
|---|---|---|
| created | | |
| checked | | |

schematic

4010_Debug

substitute for:

substitute by:

| Sheet | Sheets of | Sample |
|---|---|---|
| 5 | 31 | |
| Type | Variant | Part Number |

The reproduction, distribution and utilization of this document as well as the communication of its contents to others without explicit authorization is prohibited. Offenders will be held liable for the payment of damages. All rights reserved in the event of the grant of a patent, utility model or design.

False

# ETH-PHY (2250-2299)

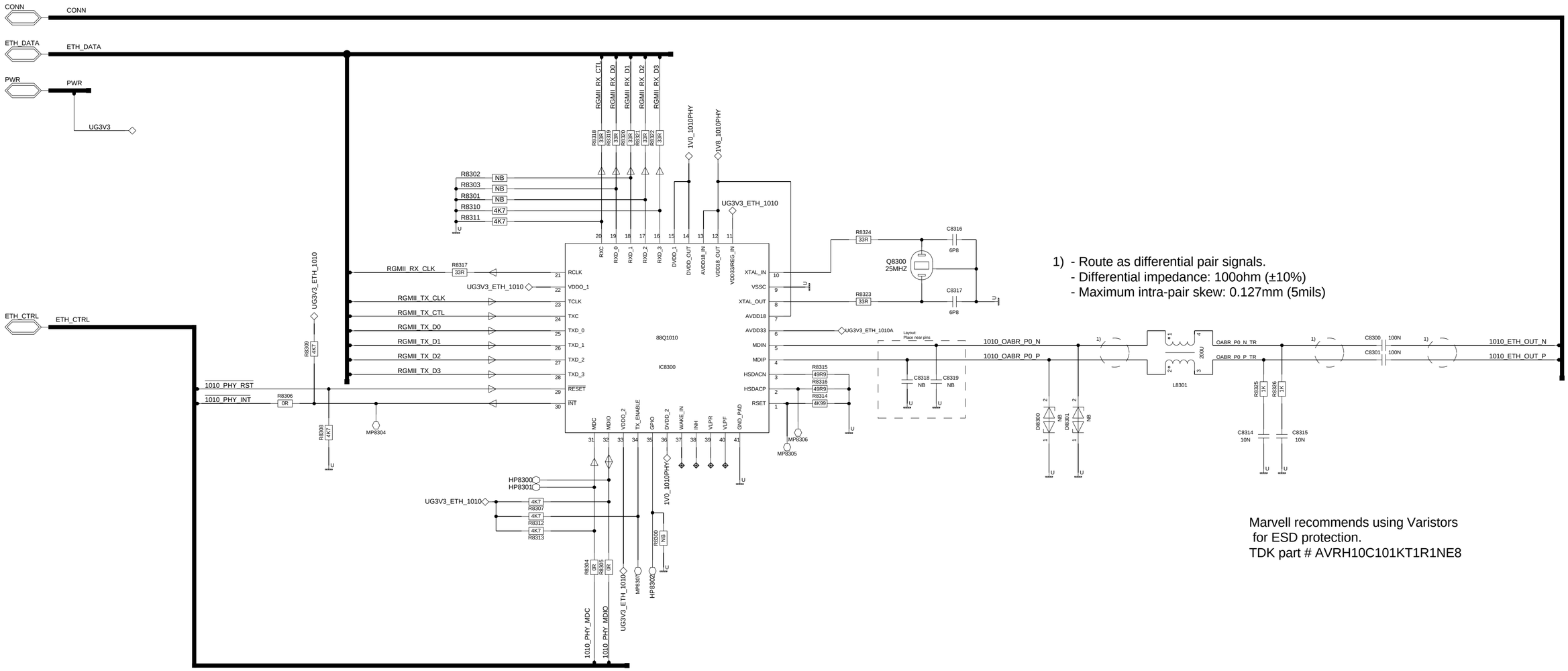


1) - Route as differential pair signals.
- Differential impedance: 100ohm (±10%)
- Maximum intra-pair skew: 0.127mm (5mils)

Marvell recommends using Varistors
for ESD protection.
TDK part # AVRH10C101KT1R1NE8

Layout:
Place 1uF caps near each Power Pin

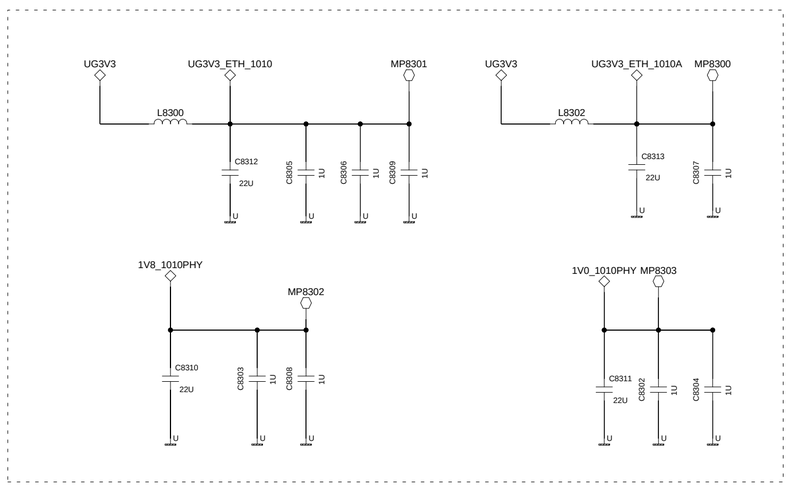


The reproduction, distribution and utilization of this document as well as the communication of its contents to others without explicit authorization is prohibited. Offenders will be held liable for the payment of damages. All rights reserved in the event of the grant of a patent, utility model or design.

| Rev. | type of change | change-no. | date of change | auth. | checked |
|---|---|---|---|---|---|

HARMAN

Copyright reserved

Wiring modifications reserved

| | date | name |
|---|---|---|
| created | | |
| checked | | |

| schematic | Sheet | Sheets of | Sample |
|---|---|---|---|
| 4010_ETH_PHY | 6 | 31 | |
| | Type | Variant | Part Number |
| substitute for: | substitute by: | | |

A2 16.02.12

False

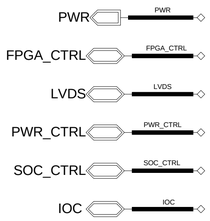


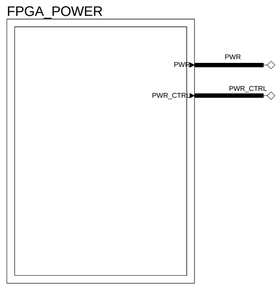


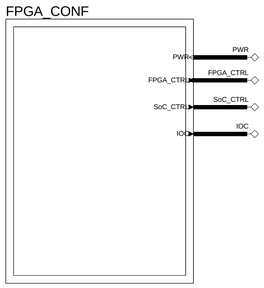


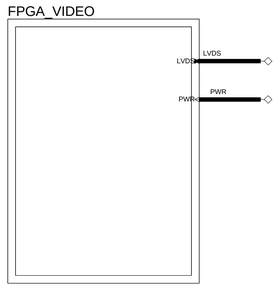


The reproduction, distribution and utilization of this document as well as the communication of its contents to others without explicit authorization is prohibited. Offenders will be held liable for the payment of damages. All rights reserved in the event of the grant of a patent, utility model or design.

| Rev. | type of change | change-no. | date of change | auth. | checked |
|---|---|---|---|---|---|
| | | | | | |
| | | | | | |
| | | | | | |
| | | | | | |
| | | | | | |

HARMAN

Copyright reserved

Wiring modifications reserved

| | date | name |
|---|---|---|
| created | | |
| checked | | |

schematic

4010_FPGA

| Sheet | Sheets of | Sample |
|---|---|---|
| 7 | 31 | |

| Type | Variant | Part Number |
|---|---|---|
| | C143 | |

substitute for:

substitute by:

A4 210x297

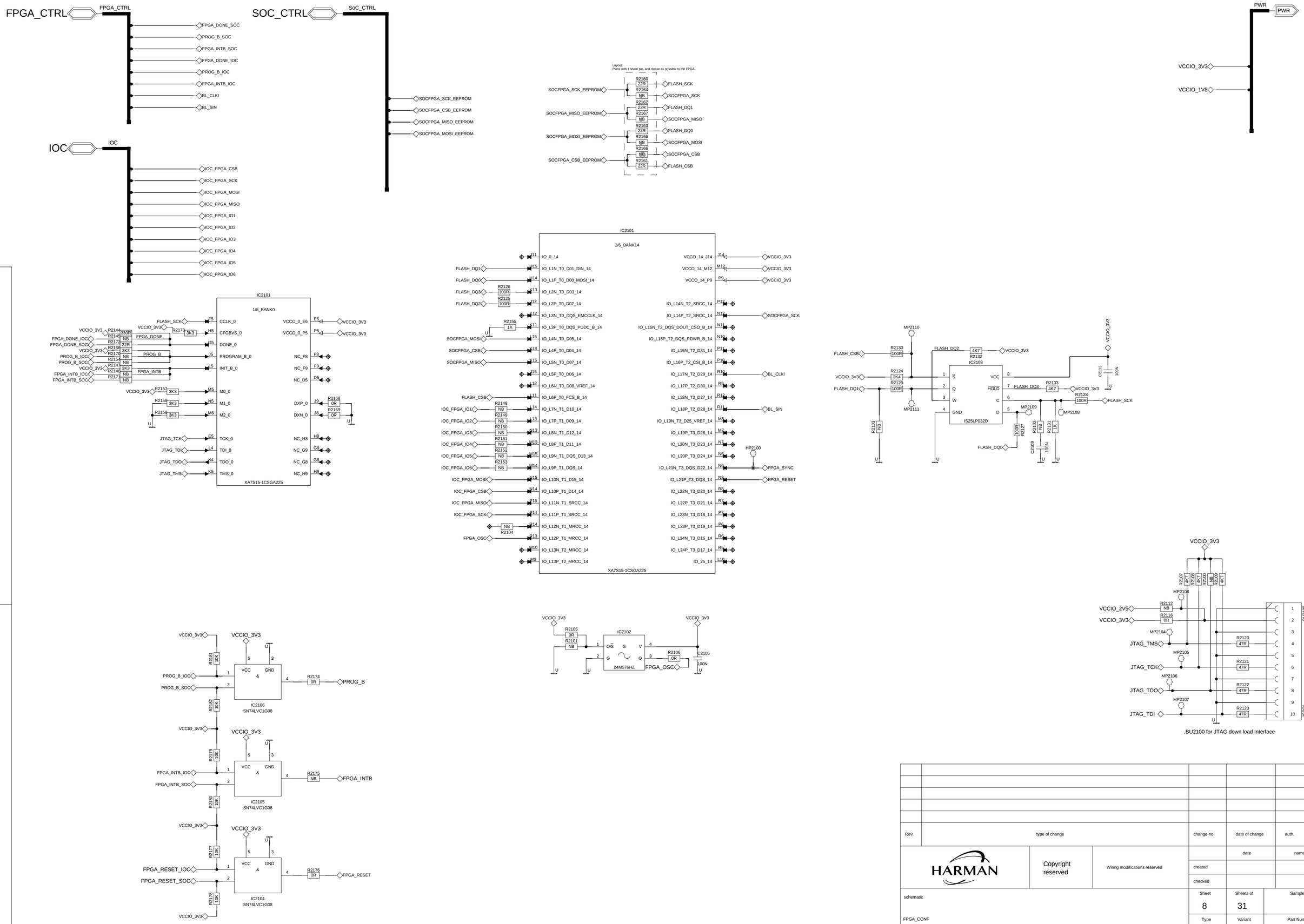


The reproduction, distribution and utilization of this document as well as the communication of its contents to others without explicit authorization is prohibited. Offenders will be held liable for the payment of damages. All rights reserved in the event of the grant of a patent, utility model or design.

| Rev. | type of change | change-no. | date of change | auth. | checked |
|---|---|---|---|---|---|
| | | | | | |

HARMAN

Copyright reserved

Wiring modifications reserved

| | date | name |
|---|---|---|
| created | | |
| checked | | |

schematic

FPGA_CONF

substitute for:

substitute by:

| Sheet | Sheets of | Sample |
|---|---|---|
| 8 | 31 | |
| Type | Variant | Part Number |
| | C143 | |

A2 16.02.12

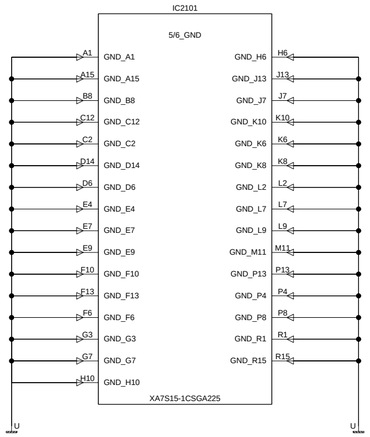


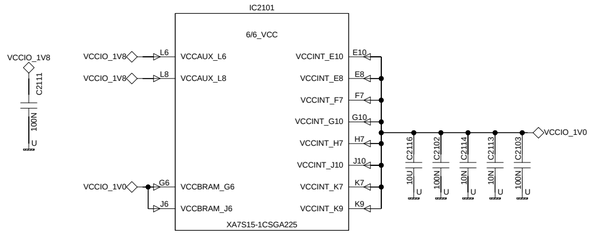


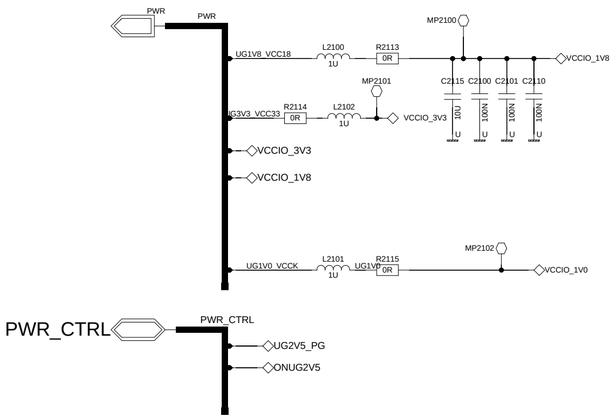


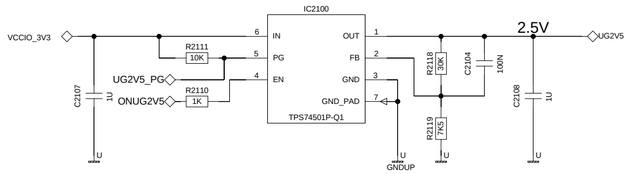


The reproduction, distribution and utilization of this document as well as the communication of its contents to others without explicit authorization is prohibited. Offenders will be held liable for the payment of damages. All rights reserved in the event of the grant of a patent, utility model or design.

| Rev. | type of change | change-no. | date of change | auth. | checked |
|---|---|---|---|---|---|
| | | | | | |
| | | | | | |
| | | | | | |
| | | | | | |
| | | | | | |

HARMAN

Copyright reserved

Wiring modifications reserved

| | date | name |
|---|---|---|
| created | | |
| checked | | |

schematic

FPGA_POWER

| Sheet | Sheets of | Sample |
|---|---|---|
| 9 | 31 | |
| Type | Variant | Part Number |
| | C143 | |

substitute for:

substitute by:

A2 16.02.12

The reproduction, distribution and utilization of this document as well as the communication of its contents to others without explicit authorization is prohibited. Offenders will be held liable for the payment of damages. All rights reserved in the event of the grant of a patent, utility model or design.

| Rev. | type of change | change-no. | date of change | auth. | checked |
|---|---|---|---|---|---|
| | | | | | |
| | | | | | |
| | | | | | |
| | | | | | |
| | | | | | |

HARMAN

Copyright reserved

Wiring modifications reserved

| | date | name |
|---|---|---|
| created | | |
| checked | | |

schematic

FPGA_VIDEO

| Sheet | Sheets of | Sample |
|---|---|---|
| 10 | 31 | |
| Type | Variant | Part Number |
| | C143 | |

substitute for:

substitute by:

A2 16:02:12

IOC (2300-2399)

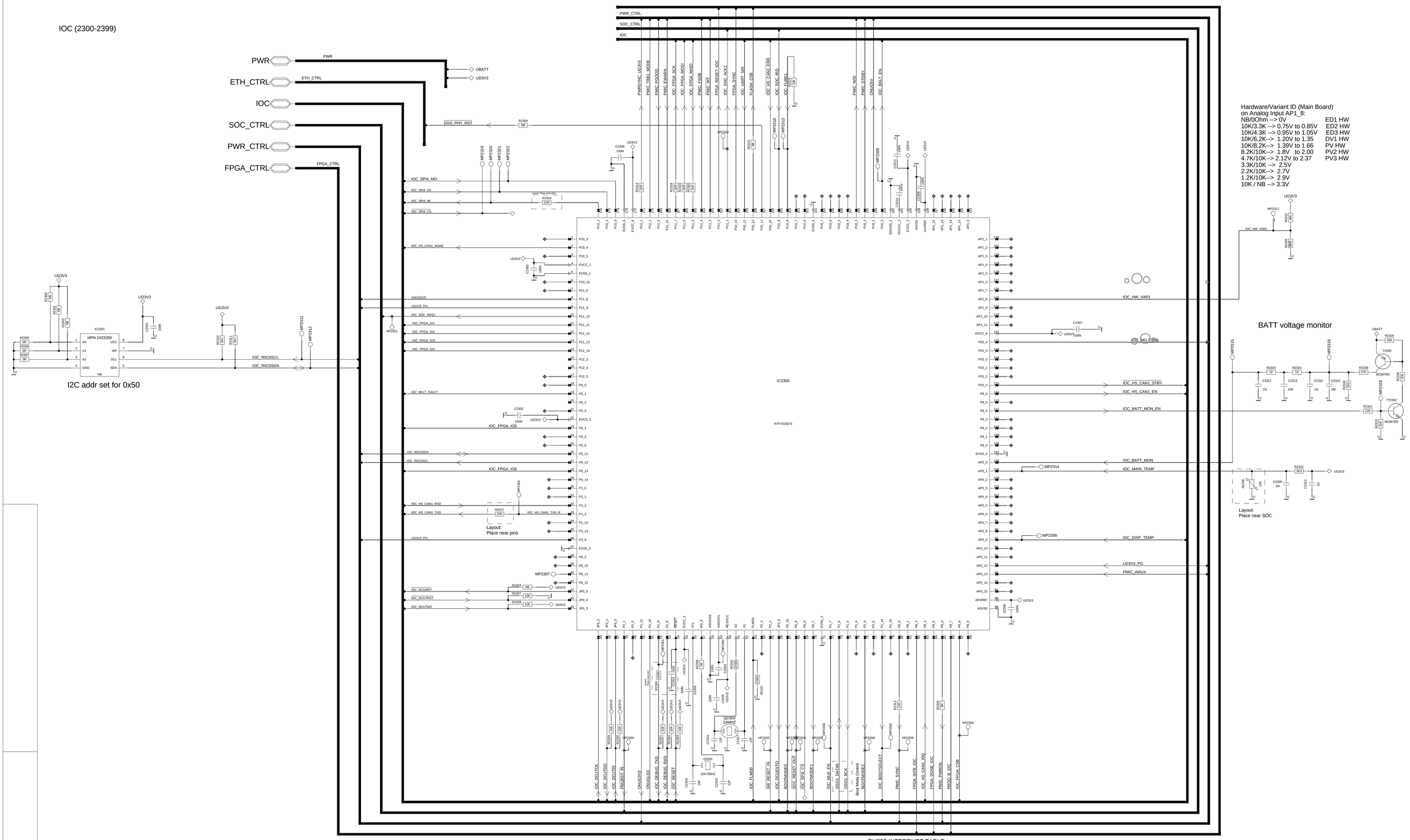


PWM/SYNC SIGNALS

| PIN NO. | FUNCTION | SIGNAL | TIMER | FREQUENCY |
|---|---|---|---|---|
| 113 | PWM | IOC_BKLT_PWM | TAUJ1O1 | 200 - 300 Hz |
| 18 | PS SYNC | IOC_BKLT_SYNC | HW Defined | 2 MHz |
| 171 | PS SYNC | PWRSYNC_UG3V3 | HW Defined | 250 - 500KHz |
| 80 | PS SYNC | PMIC_SYNC | HW Defined | 2.5 MHz |

| RH850 I2C BUS COMPONENTS | |
|---|---|
| DEVICE | 7-BIT ADDRESS |
| IOC EEPROM (IC2301) | 0x50 |
| PMIC1 PF8100 (IC14200) | 0x08 |

RH850 INTERRUPT TABLE

| | | |
|---|---|---|
| INTP0 | AWO | IOC_BKLT_FAULT |
| INTP1 | ISO | ---------- |
| INTP2 | ISO | ---------- |
| INTP3 | ISO | HS_CAN1_RXD |
| INTP4 | ISO | ---------- |
| INTP5 | AWO | ---------- |
| INTP6 | AWO | ---------- |
| INTP7 | AWO | ---------- |
| INTP8 | AWO | HS_CAN1_IRQ |
| INTP9 | AWO | ---------- |
| INTP10 | ISO | IOC_SOC_IPC_IRQ |
| INTP11 | AWO | ---------- |
| INTP12 | AWO | ---------- |
| INTP13 | AWO | ---------- |
| INTP14 | AWO | DEBUG_RX |
| INTP15 | AWO | ---------- |

| Rev. | type of change | change-no. | date of change | auth. | checked |
|---|---|---|---|---|---|

HARMAN

Copyright reserved

Wiring modifications reserved

| | date | name |
|---|---|---|
| created | | |
| checked | | |

| schematic | Sheet | Sheets of | Sample |
|---|---|---|---|
| 4010_IOC | 11 | 31 | |
| | Type | Variant | Part Number |
| | | C143 | |

substitute for: | substitute by:

The reproduction, distribution and utilization of this document as well as the communication of its contents to others without explicit authorization is prohibited. Offenders will be held liable for the payment of damages. All rights reserved in the event of the grant of a patent, utility model or design.

MAIN CONNECTOR (5300-5399)

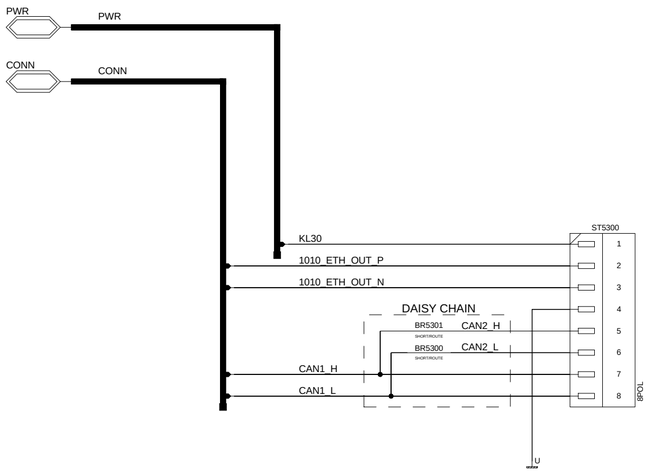


The reproduction, distribution and utilization of this document as well as the communication of its contents to others without explicit authorization is prohibited. Offenders will be held liable for the payment of damages. All rights reserved in the event of the grant of a patent, utility model or design.

| Rev. | type of change | change-no. | date of change | auth. | checked |
|---|---|---|---|---|---|
| | | | | | |
| | | | | | |
| | | | | | |
| | | | | | |
| | | | | | |

HARMAN

Copyright reserved

Wiring modifications reserved

| | date | name |
|---|---|---|
| created | | |
| checked | | |

schematic

4010_Main_Connector

| Sheet | Sheets of | Sample |
|---|---|---|
| 12 | 31 | |
| Type | Variant | Part Number |

substitute for:

substitute by:

A2 16:02:12

False

# PMIC1 (14200-14299)

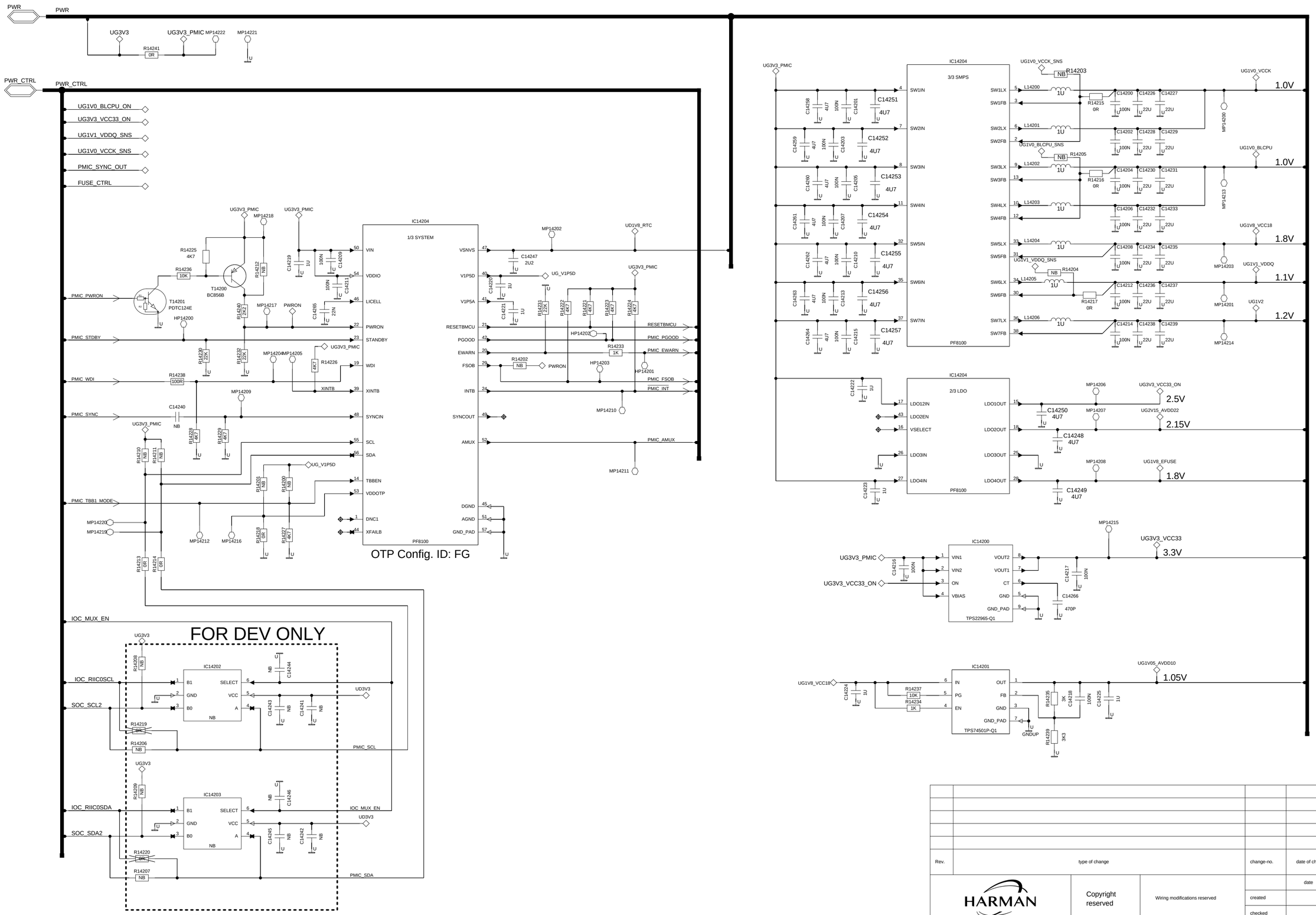


Components for DEV only:
C501, C503, C504, C506 are 100N and HPN: 3504271
C502 and C505 are 1N and HPN: 3661725
R14224 and R14225 are 2K2 and HPN: 4026294
IC501 and IC502 are NLVASB3157DFT2G and HPN: 2580896
All components are replace in the Variant.

The reproduction, distribution and utilization of this document as well as the communication of its contents to others without explicit authorization is prohibited. Offenders will be held liable for the payment of damages. All rights reserved in the event of the grant of a patent, utility model or design.

| Rev. | type of change | change-no. | date of change | auth. | checked |
|---|---|---|---|---|---|

HARMAN

Copyright reserved

Wiring modifications reserved

| | date | name |
|---|---|---|
| created | | |
| checked | | |

schematic

4010_PMIC1

| Sheet | Sheets of | Sample |
|---|---|---|
| 13 | 31 | |
| Type | Variant | Part Number |

substitute for:

substitute by:

A2 16.02.12

False

POWER (4800-4999)

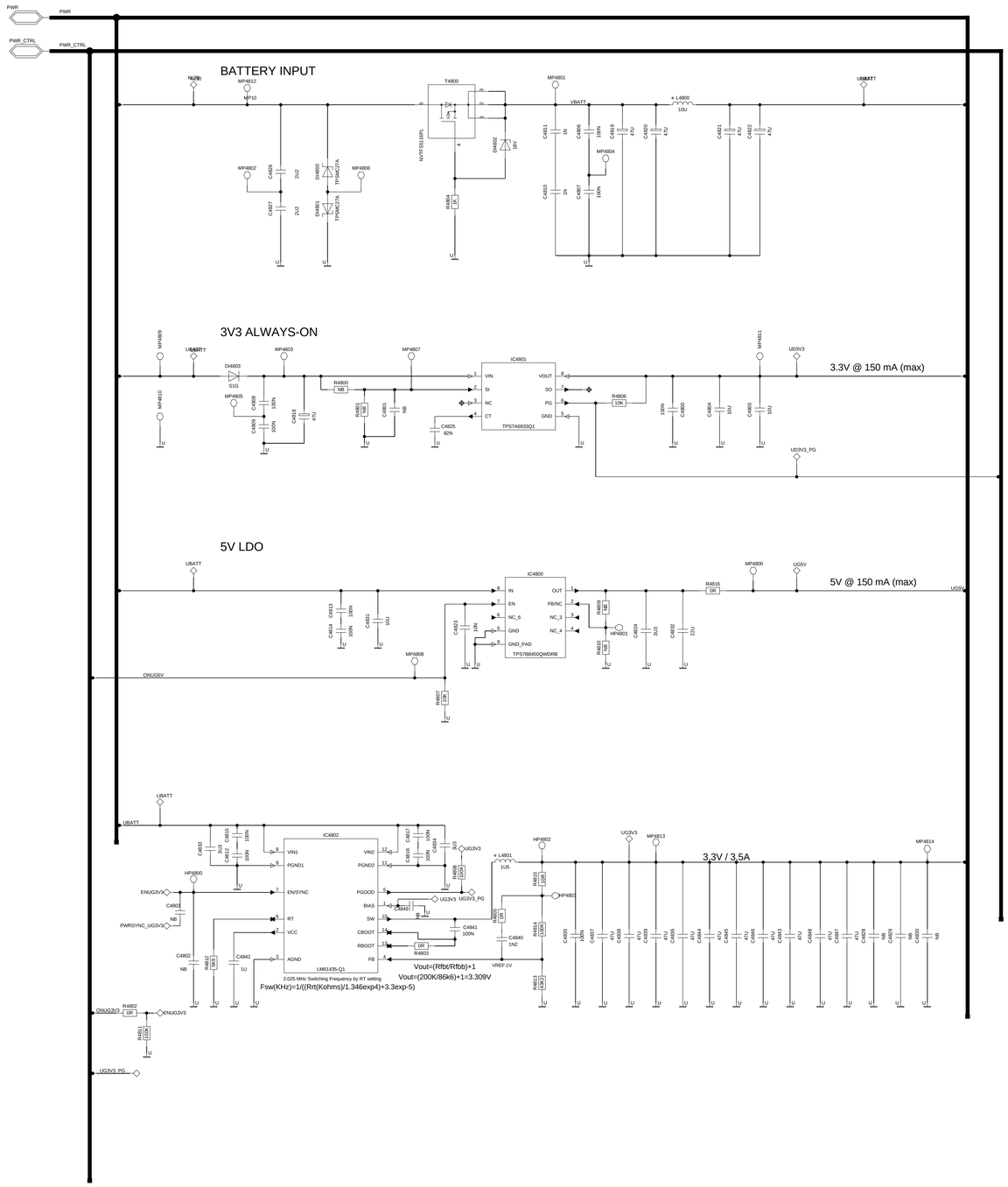


The reproduction, distribution and utilization of this document as well as the communication of its contents to others without explicit authorization is prohibited. Offenders will be held liable for the payment of damages. All rights reserved in the event of the grant of a patent, utility model or design.

| Rev. | type of change | change-no. | date of change | auth. | checked |
|---|---|---|---|---|---|
| | | | | | |

HARMAN

Copyright reserved

Wiring modifications reserved

| | date | name |
|---|---|---|
| created | | |
| checked | | |

schematic

4010_Power

| Sheet | Sheets of | Sample |
|---|---|---|
| 14 | 31 | |

| Type | Variant | Part Number |
|---|---|---|
| | | |

substitute for:

substitute by:

SOC (10000-10999)

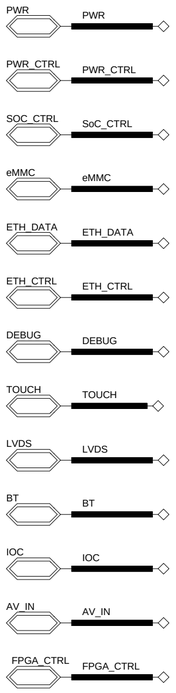


4010_SoC_Power

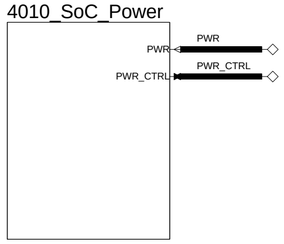


10500 - 10599

4010_SoC_CTRL

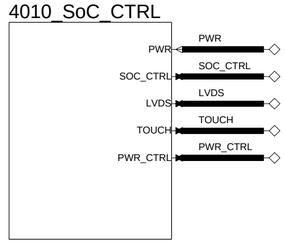


10600 - 10699

4010_SoC_Video

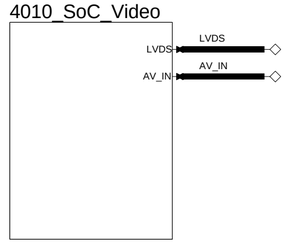


10700 - 10799

4010_SoC_LPDDR4

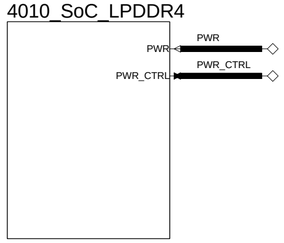


10400 - 10499

4010_SoC_ETH_PCIe_USB

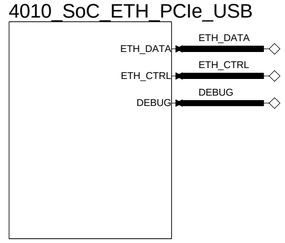


10300 - 10399

4010_SoC_Audio

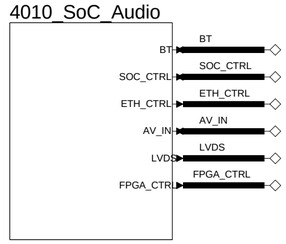


10800 - 10899

4010_SoC_eMMC_NAND_SD

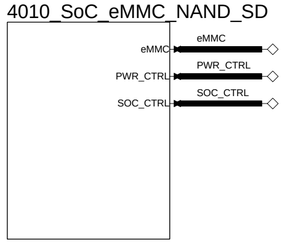


10100 - 10199

4010_SoC_Serial_IF

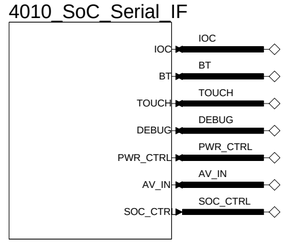


10200 - 10299

The reproduction, distribution and utilization of this document as well as the communication of its contents to others without explicit authorization is prohibited. Offenders will be held liable for the payment of damages. All rights reserved in the event of the grant of a patent, utility model or design.

| Rev. | type of change | change-no. | date of change | auth. | checked |
|---|---|---|---|---|---|

HARMAN

Copyright reserved

Wiring modifications reserved

| | date | name |
|---|---|---|
| created | | |
| checked | | |

schematic

4010_SoC

| Sheet | Sheets of | Sample |
|---|---|---|
| 15 | 31 | |
| Type | Variant | Part Number |

substitute for:

substitute by:

A2 16:02:12

False

# SOC_AUDIO (10800-10899)

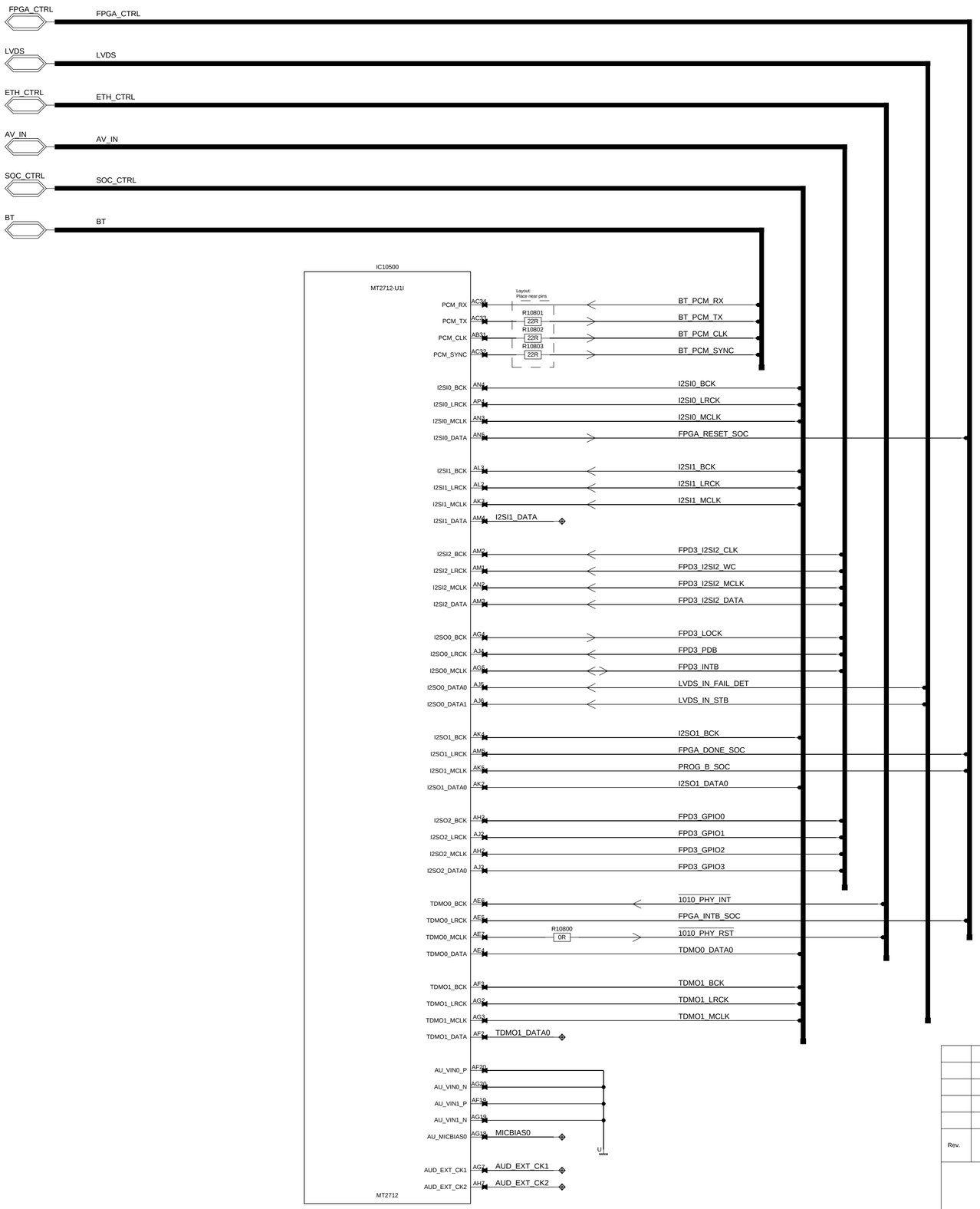


| Rev. | type of change | change-no. | date of change | auth. | checked |
|---|---|---|---|---|---|
| | | | | | |

HARMAN

Copyright reserved

Wiring modifications reserved

| | date | name |
|---|---|---|
| created | | |
| checked | | |

schematic

4010_SoC_Audio

| Sheet | Sheets of | Sample |
|---|---|---|
| 16 | 31 | |
| Type | Variant | Part Number |

substitute for:

substitute by:

A2 16:02:12

The reproduction, distribution and utilization of this document as well as the communication of its contents to others without explicit authorization is prohibited. Offenders will be held liable for the payment of damages. All rights reserved in the event of the grant of a patent, utility model or design.

# SOC_CTRL (10600-10699)

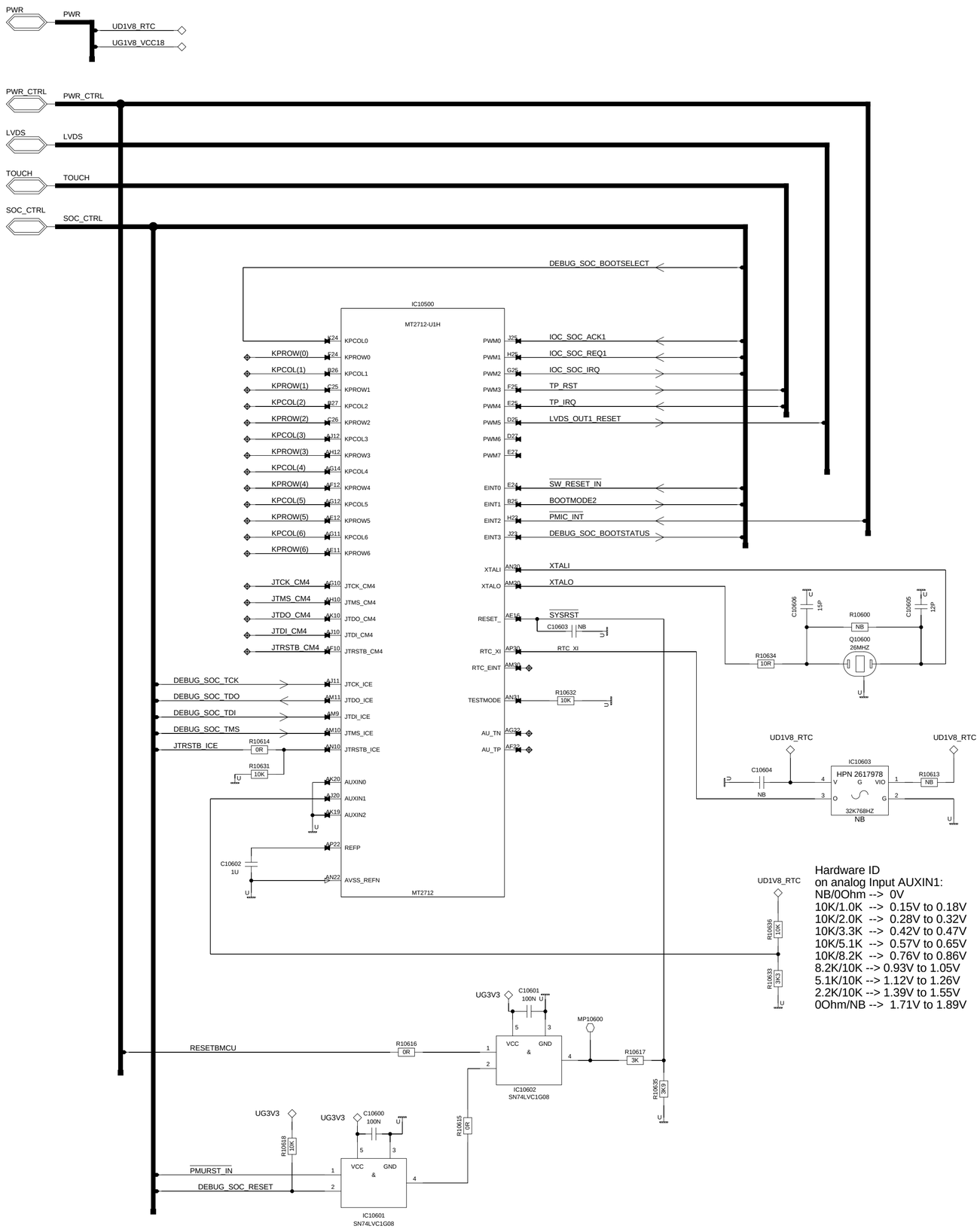


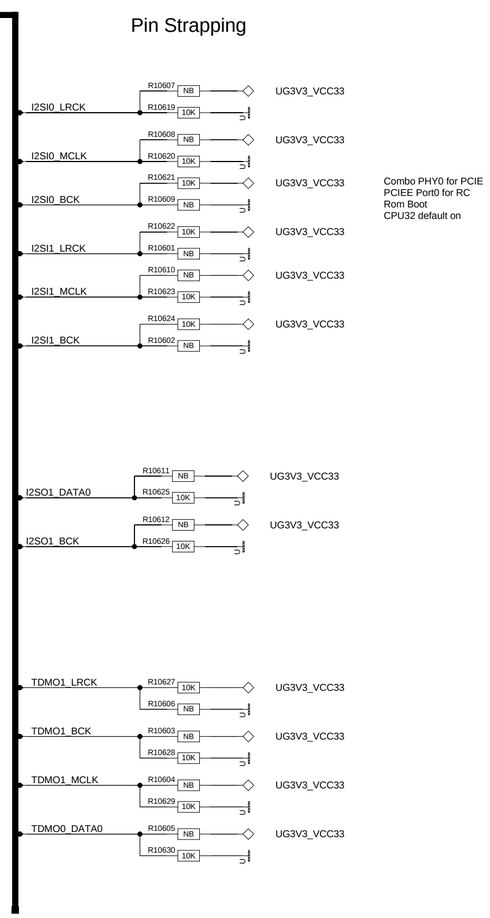


| Mode | I2SI0_LRCK | I2SI0_MCLK | I2SI0_BCK | I2SI1_BCK (multi-used) | I2SI1_LRLK | I2SI1_MCLK (multi-used) |
|---|---|---|---|---|---|---|
| Combo PHY0 for USB | X | X | X | X | X | **1** |
| Combo PHY0 for PCIE | X | X | X | X | X | **0** |
| Combo PHY1 for USB | X | X | X | X | **1** | X |
| Combo PHY1 for PCIE | X | X | X | X | **0** | X |
| PCIEE Port0 for RC | X | X | X | **1** | X | X |
| PCIEE Port0 for EP | X | X | X | **0** | X | X |
| PCIEE Port1 for RC | X | X | **1** | X | X | X |
| PCIEE Port1 for EP | X | X | **0** | X | X | X |
| Rom Boot | X | **0** | X | X | X | X |
| Nor-flash bypass rom boot | X | **1** | X | X | X | X |
| CPU32 default on | **0** | X | X | X | X | X |
| CPU64 default on | **1** | **1** | X | X | X | X |

IPC1POR/Boot Mode

| | | | | |
|---|---|---|---|---|
| I2SO1_DATA0 status[1] | L | L | H | H |
| I2SO1_BCK status[0] | L | H | L | H |
| 1 | EMMC | NAND | NOR | SD |
| 2 | SD | EMMC | NAND | NOR |
| 3 | NOR | SD | EMMC | NAND |
| 4 | NAND | NOR | SD | EMMC |

| Trapping Mode | TDMO1_LRCK | TDMO1_BCK | TDMO1_MCLK | TDMO0_DATA0 |
|---|---|---|---|---|
| Slowest Boot device speed configuration | 1 | X | X | X |
| Fastest Boot device speed configuration | 0 | X | X | X |
| NAND randomizer: disabable | X | 0 | X | X |
| NAND randomizer: enable | X | 1 | X | X |
| NOR flash address mode: 3-byte | X | X | 0 | X |
| NOR flash address mode: 4-byte | X | X | 1 | X |
| Alternative boot loader: disable | X | X | X | 0 |
| Alternative boot loader: enable | X | X | X | 1 |

Hardware ID
on analog Input AUXIN1:

| | |
|---|---|
| NB/0Ohm --> 0V | ED1 HW |
| 10K/1.0K --> 0.15V to 0.18V | ED2 HW |
| 10K/2.0K --> 0.28V to 0.32V | ED3 HW |
| 10K/3.3K --> 0.42V to 0.47V | DV HW |
| 10K/5.1K --> 0.57V to 0.65V | PV HW |
| 10K/8.2K --> 0.76V to 0.86V | PV2 HW |
| 8.2K/10K --> 0.93V to 1.05V | PV3 HW |
| 5.1K/10K --> 1.12V to 1.26V | |
| 2.2K/10K --> 1.39V to 1.55V | |
| 0Ohm/NB --> 1.71V to 1.89V | |

| Rev. | type of change | change-no. | date of change | auth. | checked |
|---|---|---|---|---|---|

HARMAN

Copyright reserved

Wiring modifications reserved

| | date | name |
|---|---|---|
| created | | |
| checked | | |

schematic

4010_SoC_CTRL

| Sheet | Sheets of | Sample |
|---|---|---|
| 17 | 31 | |
| Type | Variant | Part Number |

substitute for: | substitute by:

A2 16.02.12

The reproduction, distribution and utilization of this document as well as the communication of its contents to others without explicit authorization is prohibited. Offenders will be held liable for the payment of damages. All rights reserved in the event of the grant of a patent, utility model or design.

SOC_ETH_PCIe_USB (10300-10399)

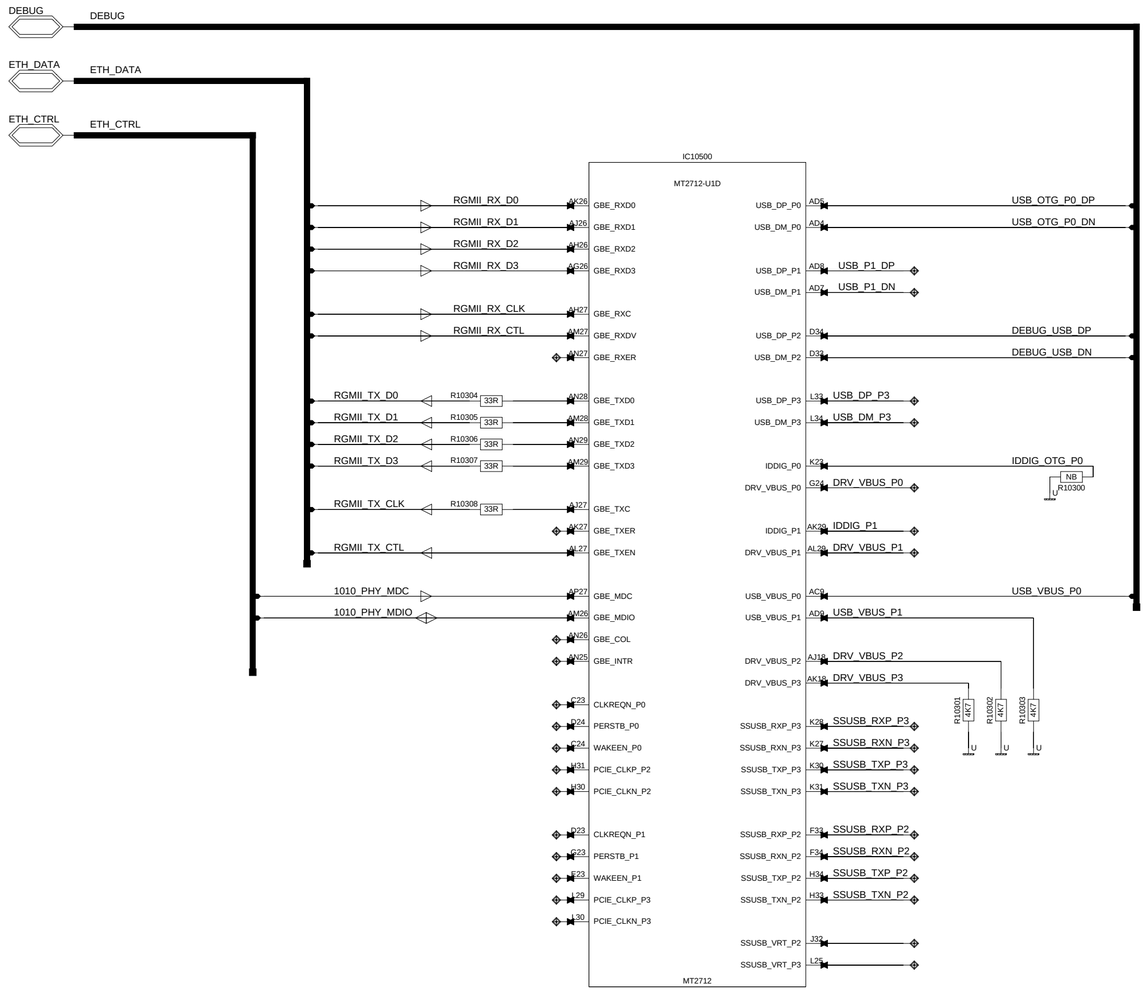


The reproduction, distribution and utilization of this document as well as the communication of its contents to others without explicit authorization is prohibited. Offenders will be held liable for the payment of damages. All rights reserved in the event of the grant of a patent, utility model or design.

| Rev. | type of change | change-no. | date of change | auth. | checked |
|---|---|---|---|---|---|

HARMAN

Copyright reserved

Wiring modifications reserved

| | date | name |
|---|---|---|
| created | | |
| checked | | |

schematic

4010_SoC_ETH_PCIe_USB

| Sheet | Sheets of | Sample |
|---|---|---|
| 18 | 31 | |
| Type | Variant | Part Number |

substitute for:

substitute by:

A2 16.02.12

SOC_LPDDR4 (10400-10499)

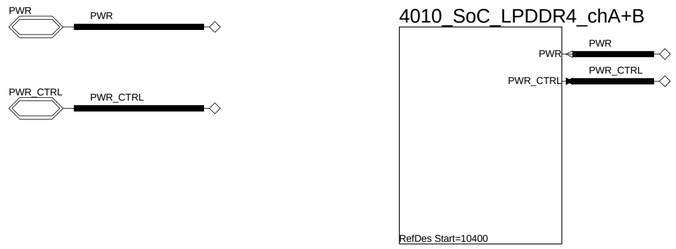


The reproduction, distribution and utilization of this document as well as the communication of its contents to others without explicit authorization is prohibited. Offenders will be held liable for the payment of damages. All rights reserved in the event of the grant of a patent, utility model or design.

| Rev. | type of change | change-no. | date of change | auth. | checked |
|---|---|---|---|---|---|

HARMAN

Copyright reserved

Wiring modifications reserved

| | date | name |
|---|---|---|
| created | | |
| checked | | |

schematic

4010_SoC_LPDDR4

| Sheet | Sheets of | Sample |
|---|---|---|
| 19 | 31 | |
| Type | Variant | Part Number |

substitute for:

substitute by:

A2 16.02.12

# SOC_LPDDR4 (10400-10449)

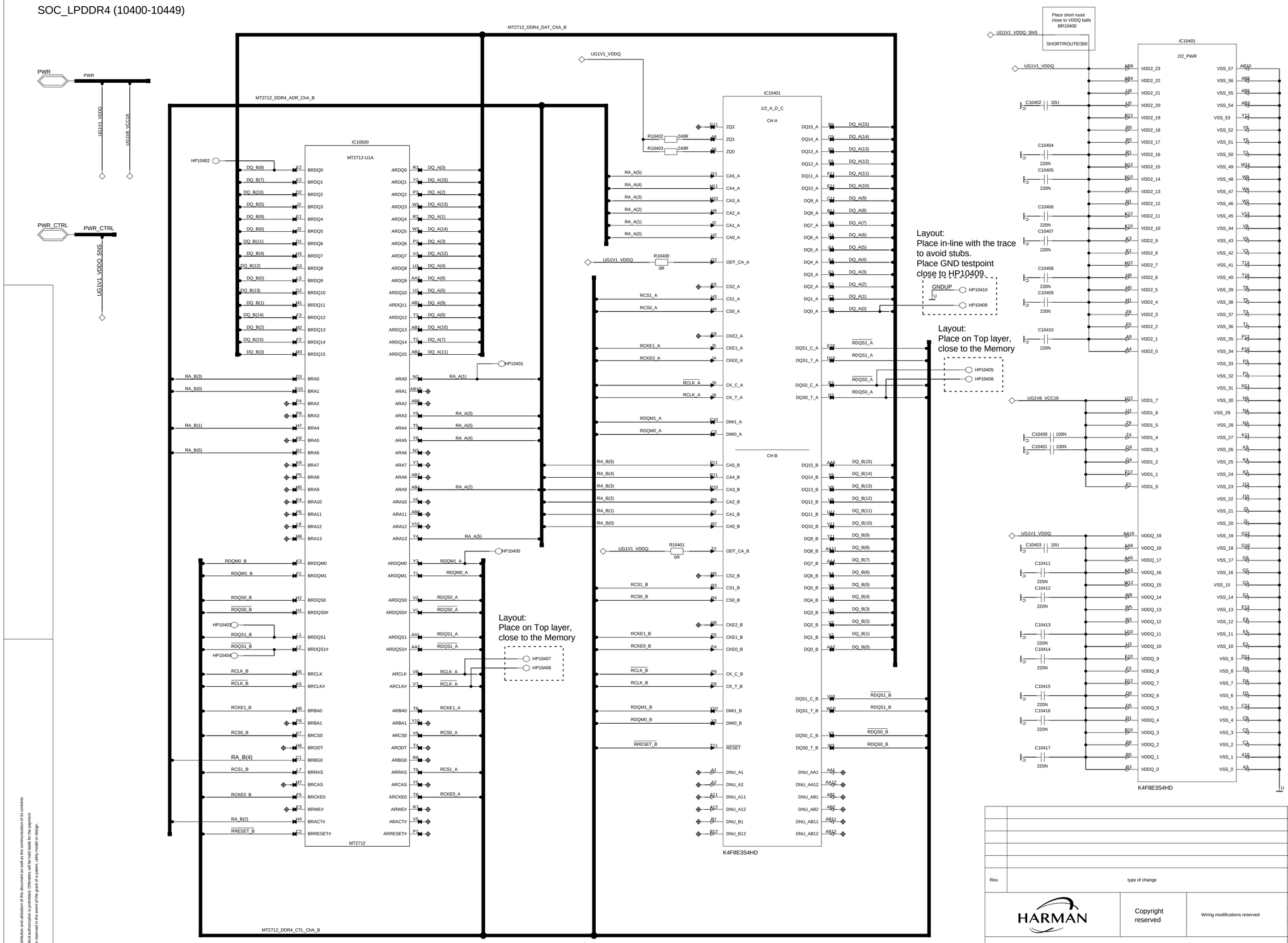


The reproduction, distribution and utilization of this document as well as the communication of its contents to others without explicit authorization is prohibited. Offenders will be held liable for the payment of damages. All rights reserved in the event of the grant of a patent, utility model or design.

| Rev. | type of change | change-no. | date of change | auth. | checked |
|---|---|---|---|---|---|

HARMAN

Copyright reserved

Wiring modifications reserved

| | date | name |
|---|---|---|
| created | | |
| checked | | |

schematic

4010_SoC_LPDDR4_chA+B

| Sheet | Sheets of | Sample |
|---|---|---|
| 20 | 31 | |
| Type | Variant | Part Number |

substitute for:

substitute by:

A2 16.02.12

# SOC_LPDDR4 (10450-10499)

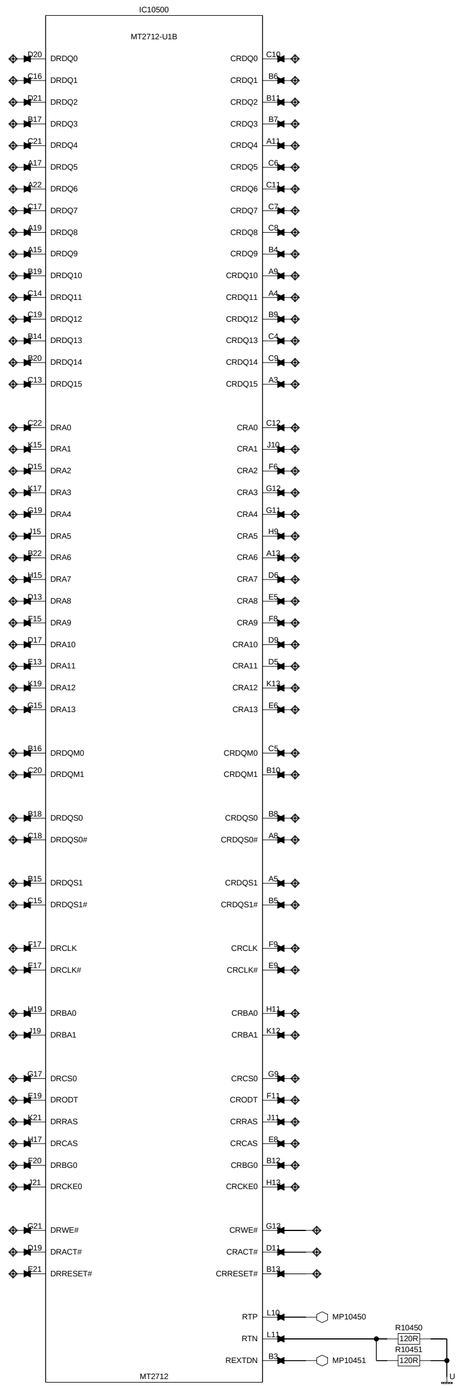


| Rev. | type of change | change-no. | date of change | auth. | checked |
|---|---|---|---|---|---|

HARMAN

Copyright reserved

Wiring modifications reserved

| | date | name |
|---|---|---|
| created | | |
| checked | | |

schematic

4010_SoC_LPDDR4_chC+D

substitute for:

substitute by:

| Sheet | Sheets of | Sample |
|---|---|---|
| 21 | 31 | |
| Type | Variant | Part Number |

A2 16.02.12

The reproduction, distribution and utilisation of this document as well as the communication of its contents to others without explicit authorization is prohibited. Offenders will be held liable for the payment of damages. All rights reserved in the event of the grant of a patent, utility model or design.

# SOC_POWER (10500-10599)

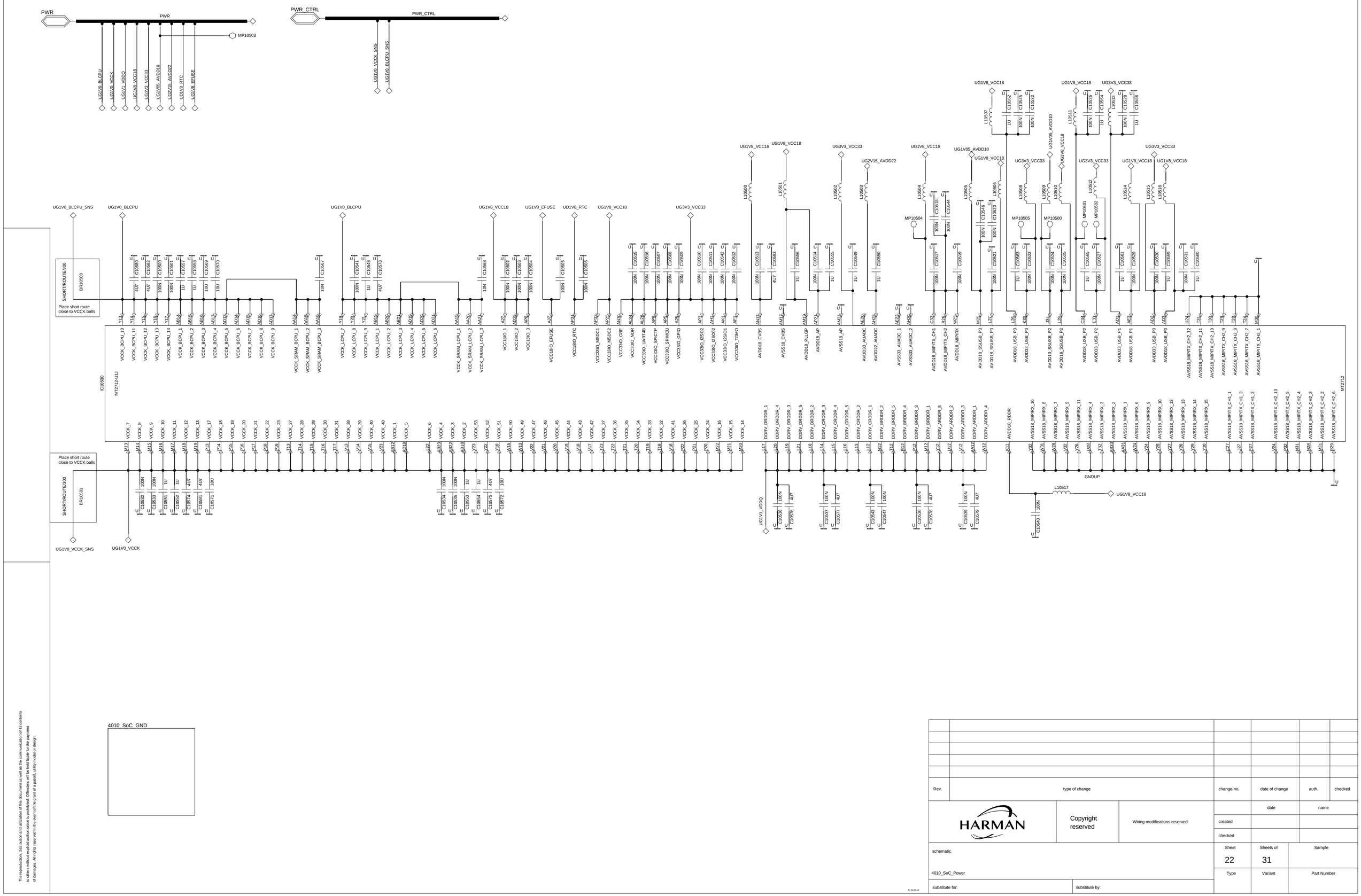


The reproduction, distribution and utilization of this document as well as the communication of its contents to others without explicit authorization is prohibited. Offenders will be held liable for the payment of damages. All rights reserved in the event of the grant of a patent, utility model or design.

| Rev. | type of change | change-no. | date of change | auth. | checked |
|---|---|---|---|---|---|

HARMAN

Copyright reserved

Wiring modifications reserved

| | date | name |
|---|---|---|
| created | | |
| checked | | |

schematic

4010_SoC_Power

substitute for:

substitute by:

| Sheet | Sheets of | Sample |
|---|---|---|
| 22 | 31 | |
| Type | Variant | Part Number |

A2 16.02.12

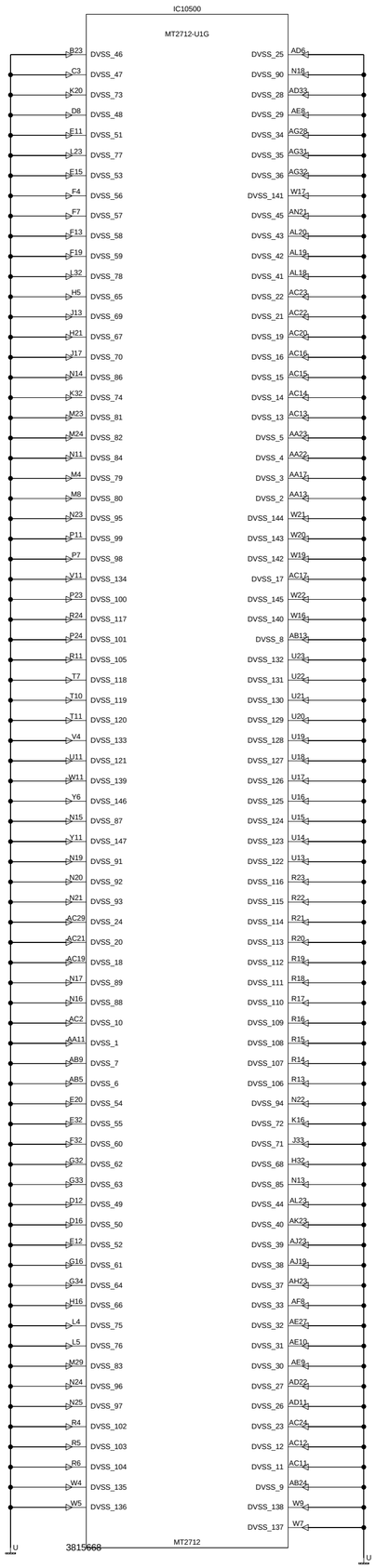


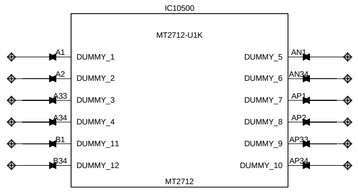


The reproduction, distribution and utilization of this document as well as the communication of its contents to others without explicit authorization is prohibited. Offenders will be held liable for the payment of damages. All rights reserved in the event of the grant of a patent, utility model or design.

| Rev. | type of change | change-no. | date of change | auth. | checked |
|---|---|---|---|---|---|
| | | | | | |
| | | | | | |
| | | | | | |
| | | | | | |
| | | | | | |

HARMAN

Copyright reserved

Wiring modifications reserved

| | date | name |
|---|---|---|
| created | | |
| checked | | |

schematic

4010_SoC_GND

| Sheet | Sheets of | Sample |
|---|---|---|
| 23 | 31 | |
| Type | Variant | Part Number |

substitute for:

substitute by:

A2 16.02.12

# SOC_SERIAL_IF (10200-10299)

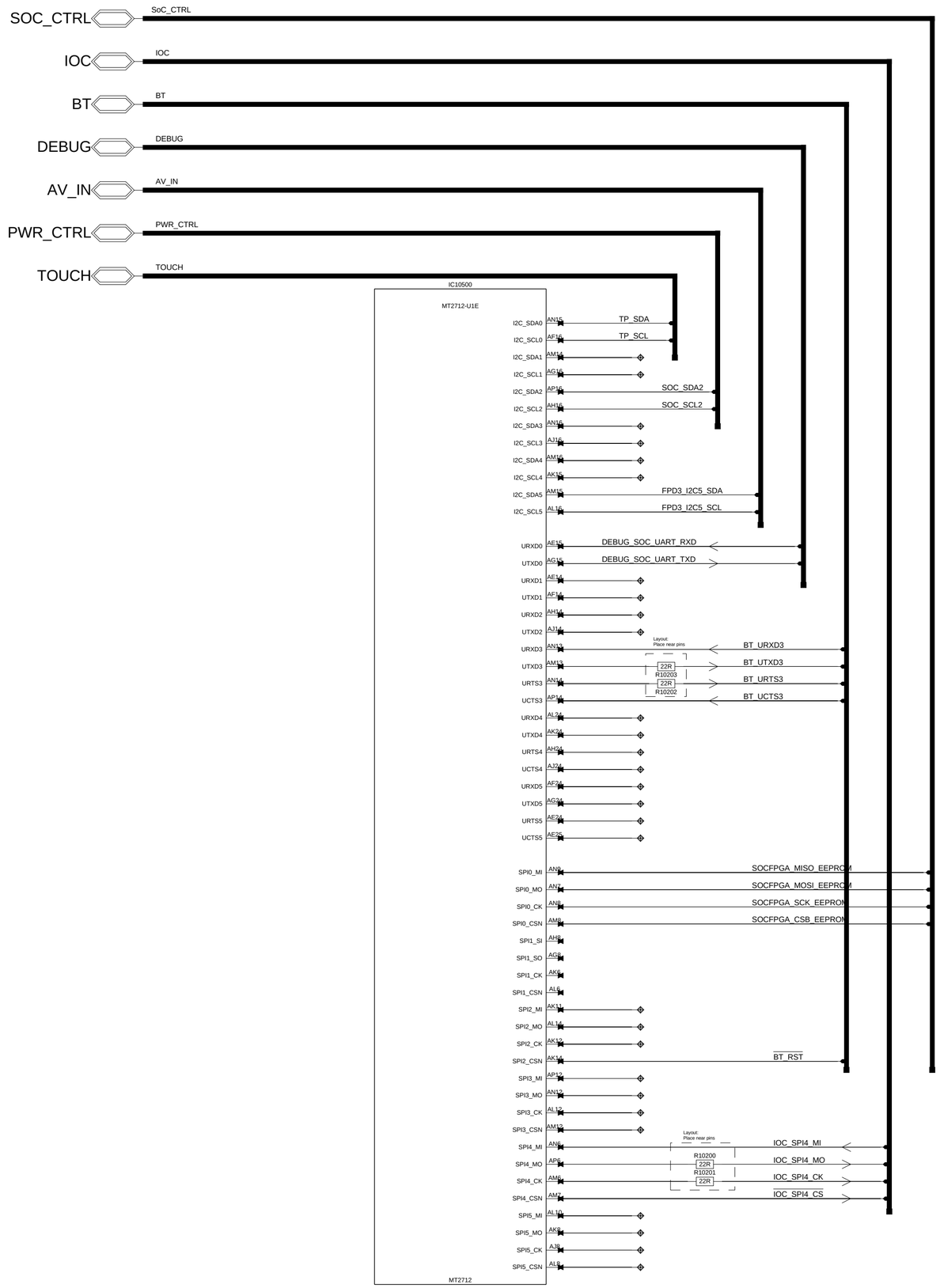


| Rev. | type of change | change-no. | date of change | auth. | checked |
|---|---|---|---|---|---|

HARMAN

Copyright reserved

Wiring modifications reserved

| | date | name |
|---|---|---|
| created | | |
| checked | | |

schematic

4010_SoC_Serial_IF

| Sheet | Sheets of | Sample |
|---|---|---|
| 24 | 31 | |
| Type | Variant | Part Number |

substitute for:

substitute by:

A2 16.02.12

The reproduction, distribution and utilization of this document as well as the communication of its contents to others without explicit authorization is prohibited. Offenders will be held liable for the payment of damages. All rights reserved in the event of the grant of a patent, utility model or design.

SOC_VIDEO (10700-10799)

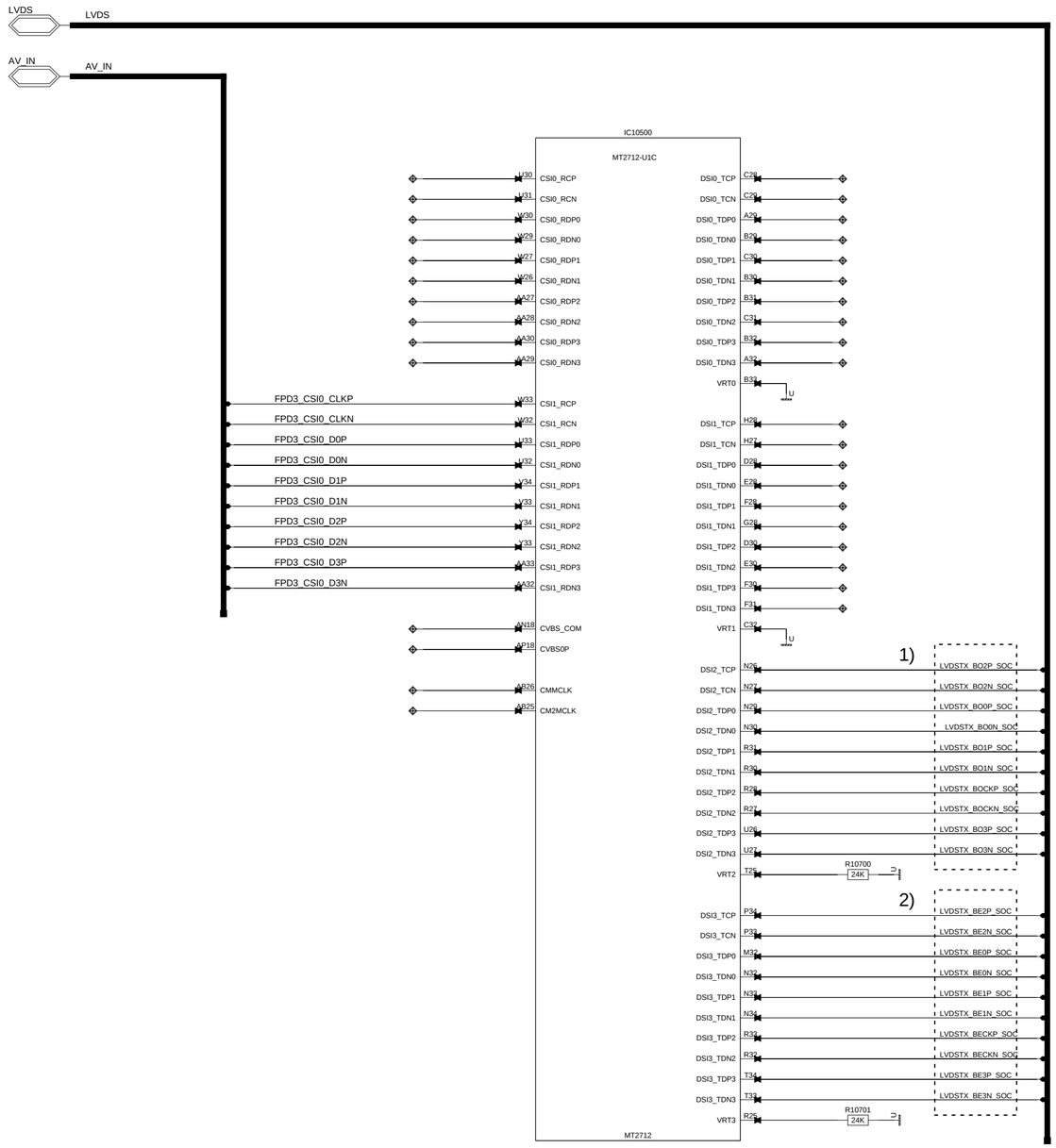


1) - Route as differential pair signals.
- Differential impedance: 100ohm (±10%)
- Maximum intra-pair skew: 0.127mm (5mils)
- Maximum skew from clock (BOCK) to data (BO[0-3]): 5mm

2) - Route as differential pair signals.
- Differential impedance: 100ohm (±10%)
- Maximum intra-pair skew: 0.127mm (5mils)
- Maximum skew from clock (BECK) to data (BE[0-3]): 5mm

The reproduction, distribution and utilization of this document as well as the communication of its contents to others without explicit authorization is prohibited. Offenders will be held liable for the payment of damages. All rights reserved in the event of the grant of a patent, utility model or design.

| Rev. | type of change | change-no. | date of change | auth. | checked |
|---|---|---|---|---|---|

HARMAN

Copyright reserved

Wiring modifications reserved

| | date | name |
|---|---|---|
| created | | |
| checked | | |

schematic

4010_SoC_Video

| Sheet | Sheets of | Sample |
|---|---|---|
| 25 | 31 | |
| Type | Variant | Part Number |

substitute for: substitute by:

A2 16.02.12

# SOC_eMMC_NAND_SID (10100-10199)

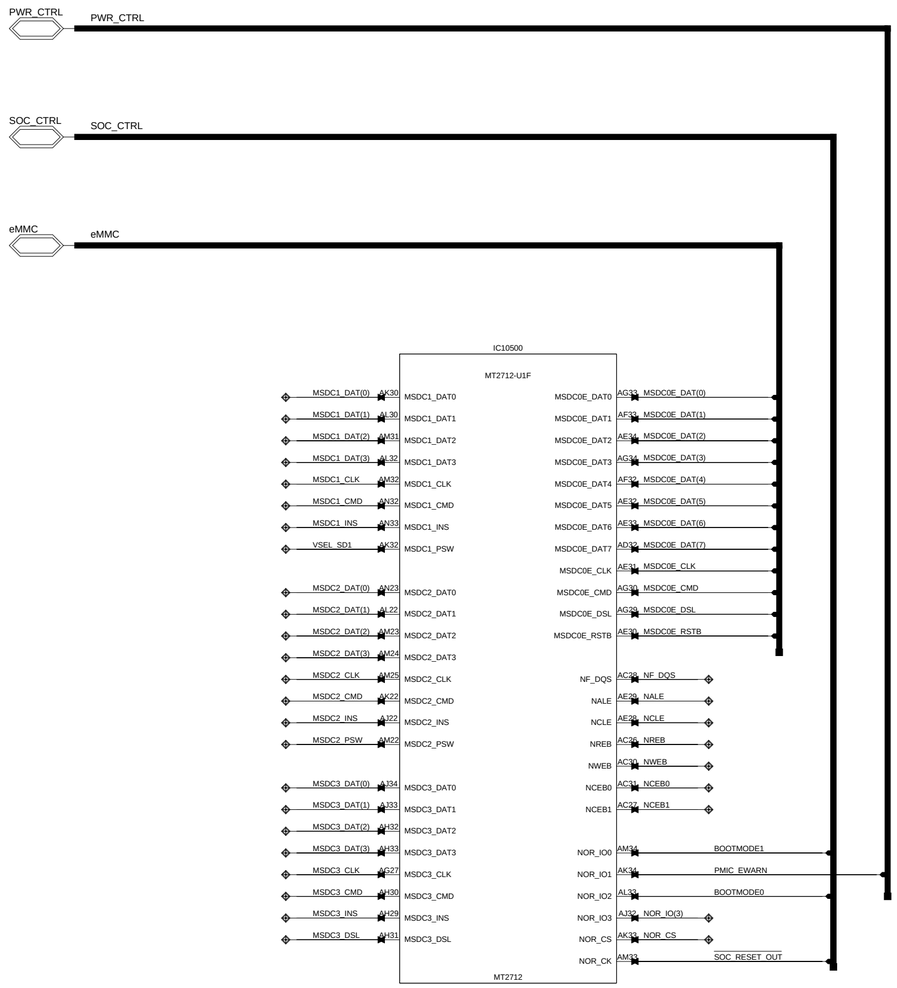


The reproduction, distribution and utilization of this document as well as the communication of its contents to others without explicit authorization is prohibited. Offenders will be held liable for the payment of damages. All rights reserved in the event of the grant of a patent, utility model or design.

| Rev. | type of change | change-no. | date of change | auth. | checked |
|---|---|---|---|---|---|
| | | | | | |
| | | | | | |
| | | | | | |
| | | | | | |
| | | | | | |

HARMAN

Copyright reserved

Wiring modifications reserved

| | date | name |
|---|---|---|
| created | | |
| checked | | |

schematic

4010_SoC_eMMC_NAND_SD

| Sheet | Sheets of | Sample |
|---|---|---|
| 26 | 31 | |
| Type | Variant | Part Number |

substitute for:

substitute by:

A2 16:02:12

TFT BL (6900-6999)

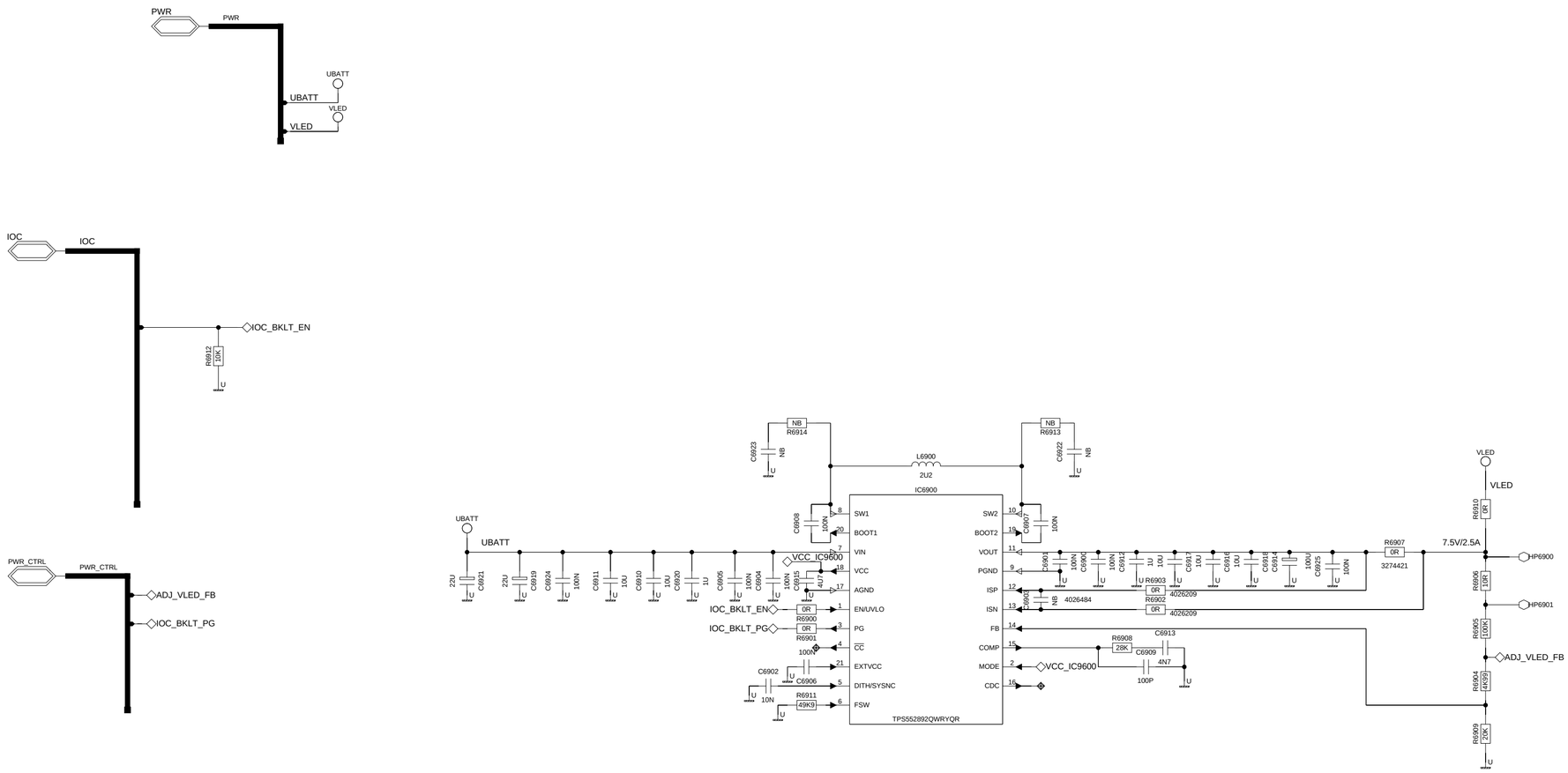


The reproduction, distribution and utilization of this document as well as the communication of its contents to others without explicit authorization is prohibited. Offenders will be held liable for the payment of damages. All rights reserved in the event of the grant of a patent, utility model or design.

| Rev. | type of change | change-no. | date of change | auth. | checked |
|---|---|---|---|---|---|
| | | | | | |
| | | | | | |
| | | | | | |
| | | | | | |
| | | | | | |

HARMAN

Copyright reserved

Wiring modifications reserved

| | date | name |
|---|---|---|
| created | | |
| checked | | |

schematic

4010_TFT_BL

substitute for:

substitute by:

| Sheet | Sheets of | Sample |
|---|---|---|
| 27 | 31 | |
| Type | Variant | Part Number |
| | C143 | |

A2 16.02.12

False
1
1
4010_TFT_BL

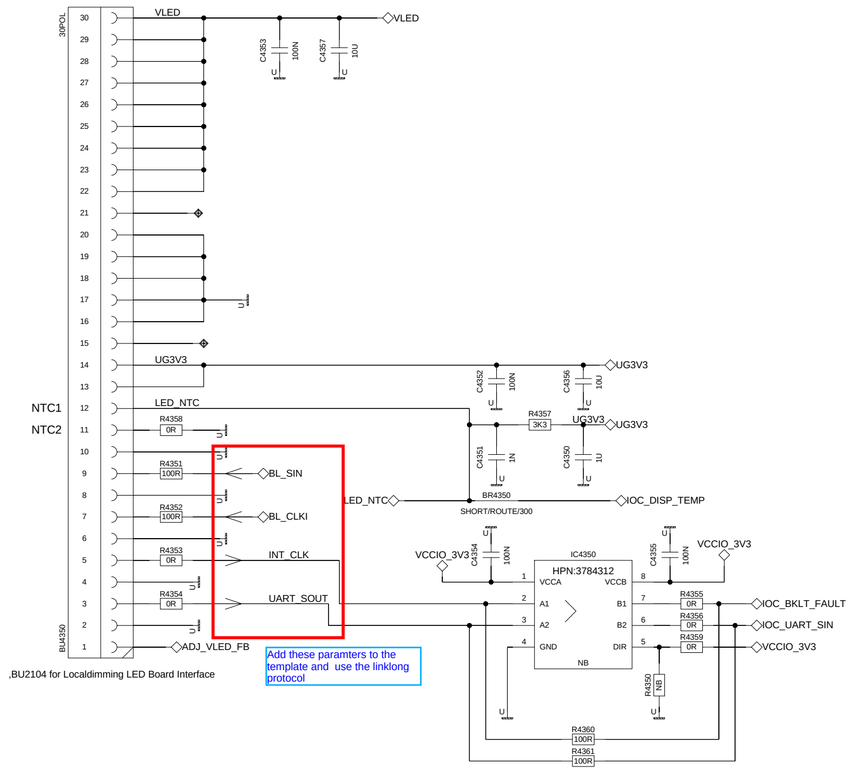


,BU2104 for Localdimming LED Board Interface

Add these paramters to the template and use the linklong protocol

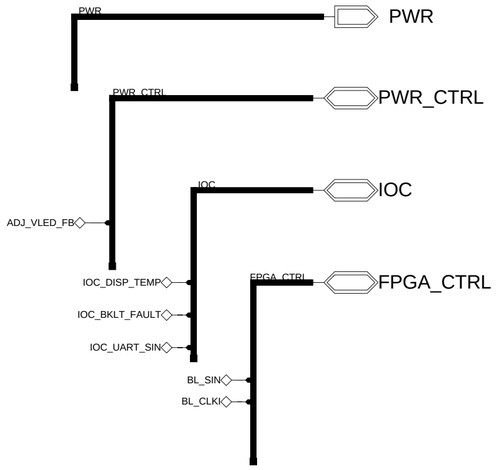


| Rev. | type of change | change-no. | date of change | auth. | checked |
|---|---|---|---|---|---|
| | | | | | |

HARMAN

Copyright reserved

Wiring modifications reserved

| | date | name |
|---|---|---|
| created | | |
| checked | | |

schematic

4010_TFT_BL_Conn

substitute for:

substitute by:

| Sheet | Sheets of | Sample |
|---|---|---|
| 28 | 31 | |
| Type | Variant | Part Number |
| | C143 | |

A2 16.02.12

The reproduction, distribution and utilization of this document as well as the communication of its contents to others without explicit authorization is prohibited. Offenders will be held liable for the payment of damages. All rights reserved in the event of the grant of a patent, utility model or design.

False

TFT_CONNECTOR (4300-4399)

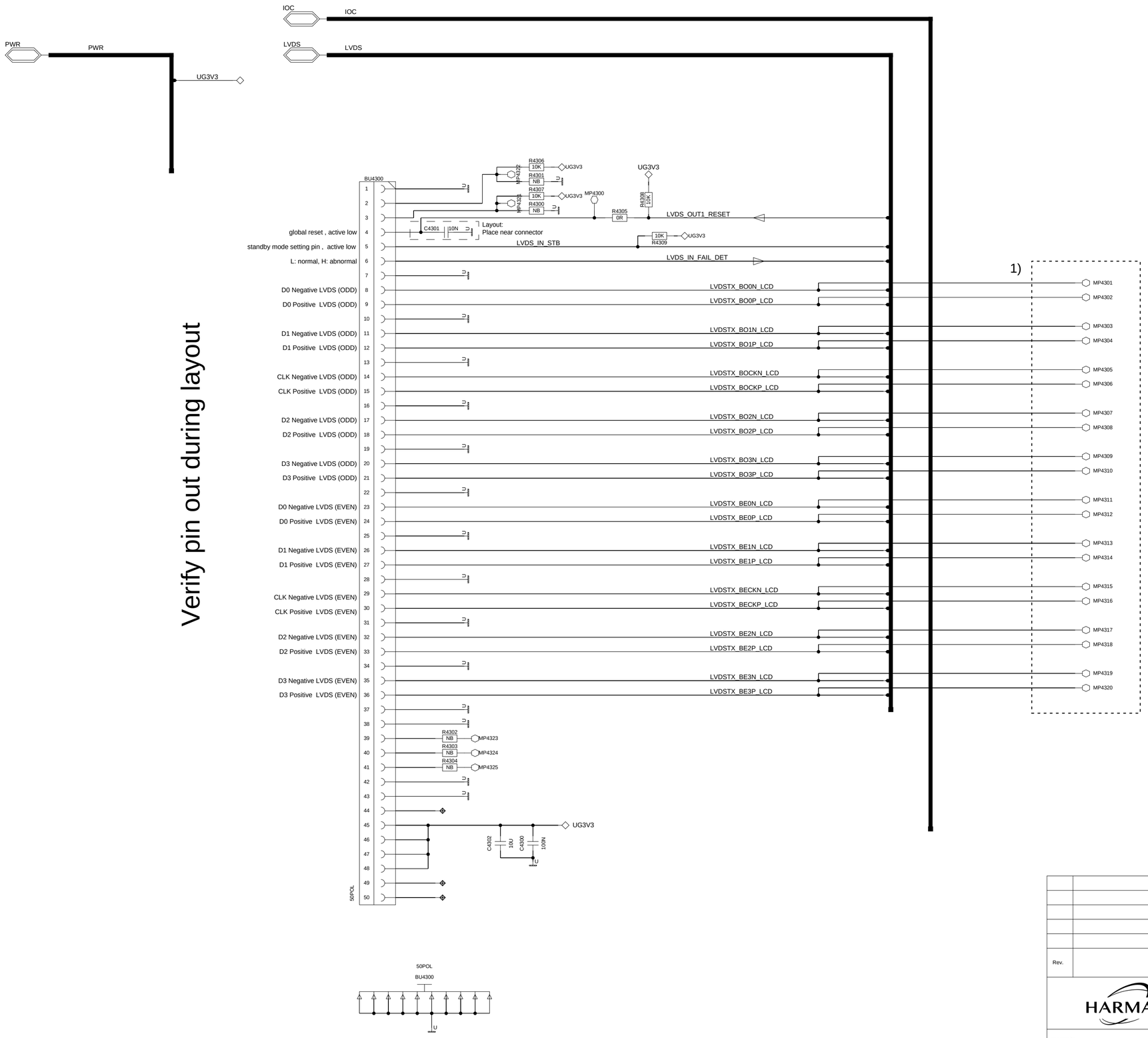


Verify pin out during layout

1) Testpoints should be placed as close as possible to an existing VIA

| Rev. | type of change | change-no. | date of change | auth. | checked |
|---|---|---|---|---|---|

HARMAN

Copyright reserved

Wiring modifications reserved

| | date | name |
|---|---|---|
| created | | |
| checked | | |

schematic

4010_TFT_Conn

| Sheet | Sheets of | Sample |
|---|---|---|
| 29 | 31 | |
| Type | Variant | Part Number |
| | C143 | |

substitute for:

substitute by:

A2 16.02.12

The reproduction, distribution and utilization of this document as well as the communication of its contents to others without explicit authorization is prohibited. Offenders will be held liable for the payment of damages. All rights reserved in the event of the grant of a patent, utility model or design.

False

# VIDEO_DES (4100-4199)

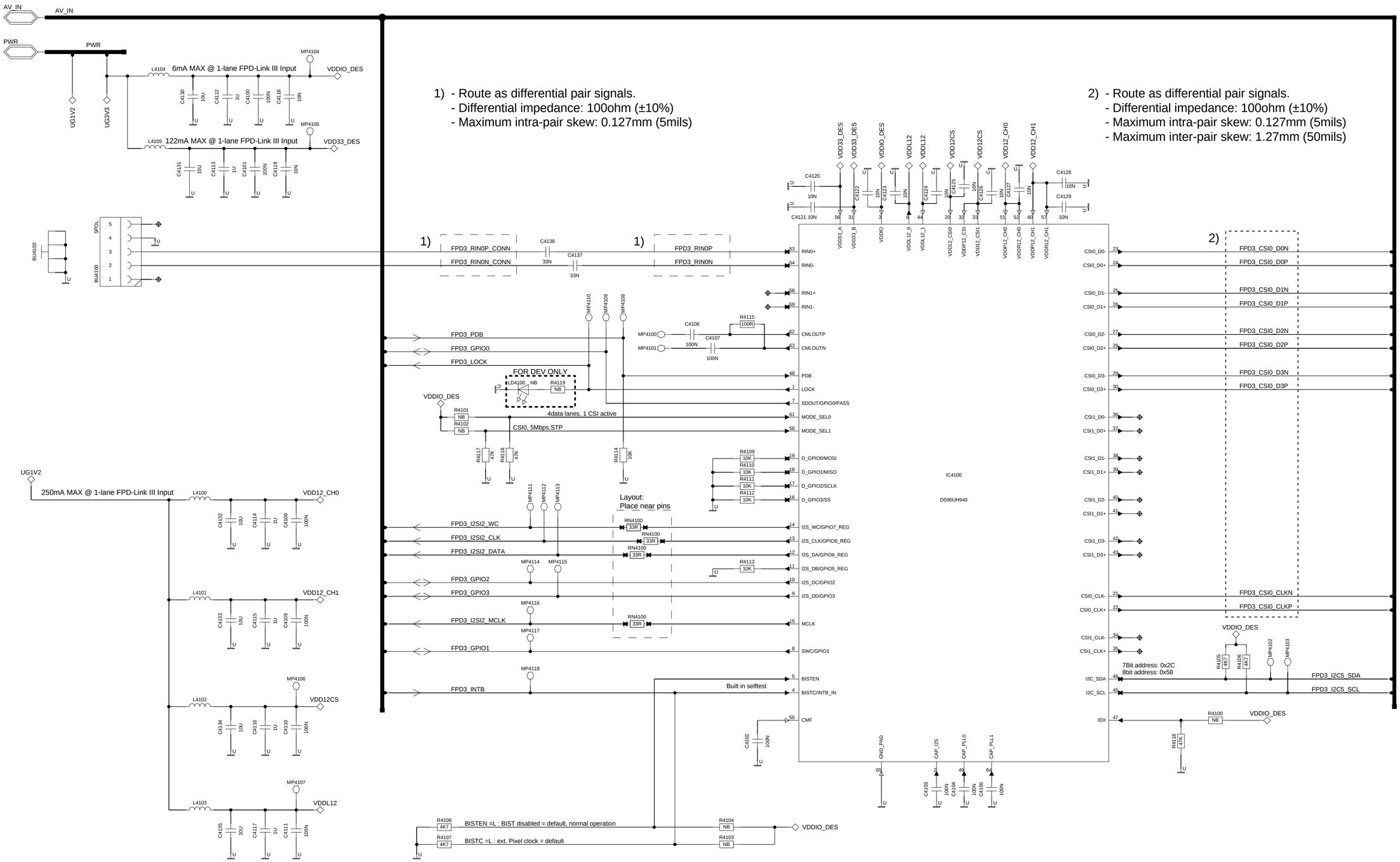


| Rev. | type of change | change-no. | date of change | auth. | checked |
|---|---|---|---|---|---|
| | | | | | |

HARMAN

Copyright reserved

Wiring modifications reserved

| | date | name |
|---|---|---|
| created | | |
| checked | | |

schematic

4010_VIDEO_DES

substitute for:

substitute by:

| Sheet | Sheets of | Sample |
|---|---|---|
| 30 | 31 | |
| Type | Variant | Part Number |
| | C143 | |

The reproduction, distribution and utilization of this document as well as the communication of its contents to others without explicit authorization is prohibited. Offenders will be held liable for the payment of damages. All rights reserved in the event of the grant of a patent, utility model or design.

False
4010_VIDEO_DES

# eMMC (2250-2299)

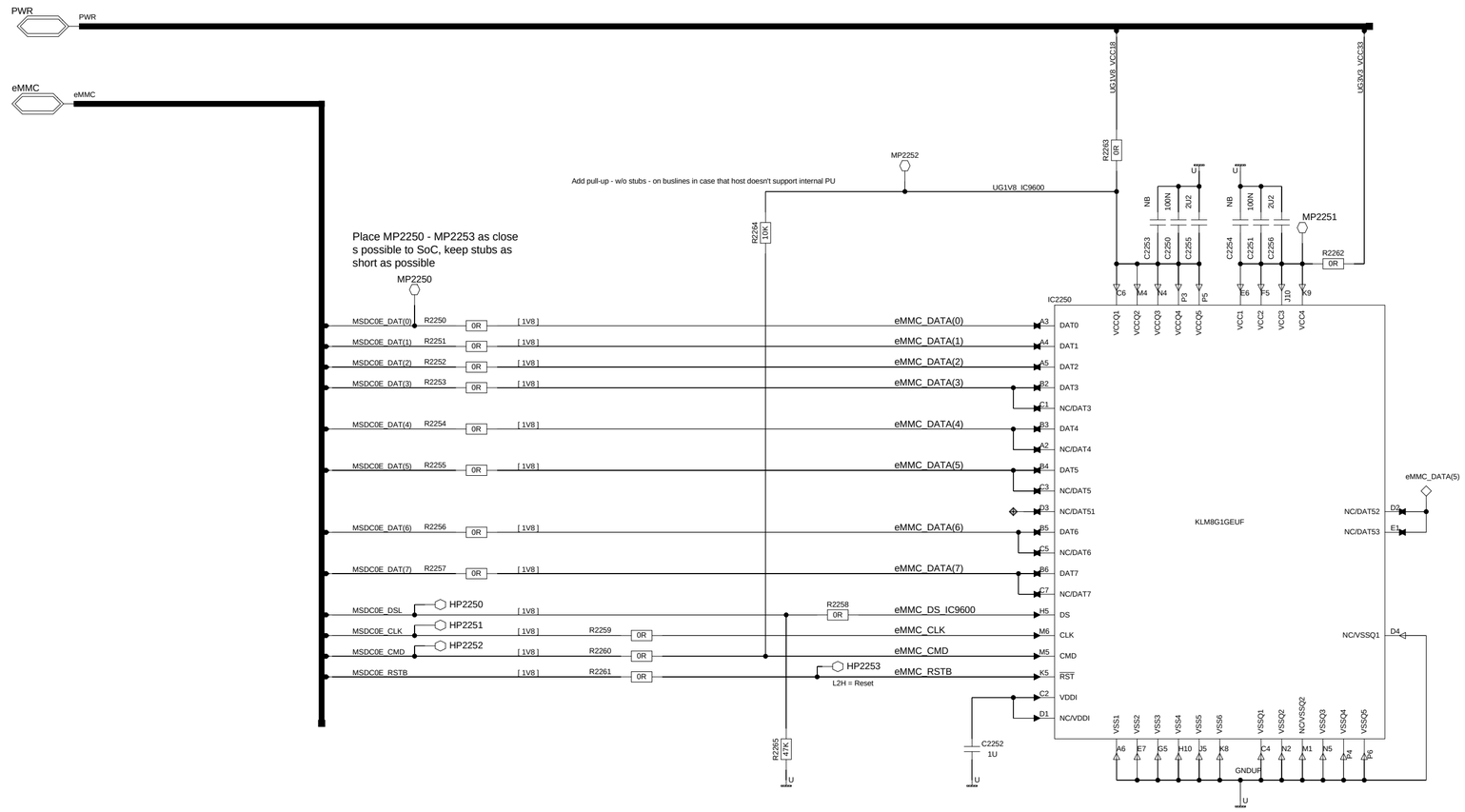


| eMMC | Density | Part Number |
|---|---|---|
| Micron (-40 to 105°C) | 8 GB | 3881466 |
| Micron (-40 to 85°C) | 8 GB | 3543617 |

The reproduction, distribution and utilization of this document as well as the communication of its contents to others without explicit authorization is prohibited. Offenders will be held liable for the payment of damages. All rights reserved in the event of the grant of a patent, utility model or design.

| Rev. | type of change | change-no. | date of change | auth. | checked |
|---|---|---|---|---|---|

HARMAN

Copyright reserved

Wiring modifications reserved

| | date | name |
|---|---|---|
| created | | |
| checked | | |

schematic

4010_eMMC

| Sheet | Sheets of | Sample |
|---|---|---|
| 31 | 31 | |
| Type | Variant | Part Number |

substitute for:

substitute by:

A2 16.02.12

False